AN ISO 9001:2015 CERTIFIED COMPANY

USER MANUAL

Shrink Tunnel

3520/4025/5035 STV

CONTENT

Sl no	Description	Page no
1.	Foreword	3
2.	How to use this manual	4
3.	Safety precautions	4
4.	Packing case and machine dimensions	5
5.	Packing slip	6
6.	Technical specifications	7
7.	Unpacking	8
8.	List of parts	9
9.	Installation	12
10.	Power connection	12
11.	Control panel	12
12.	Starting the machine	13
13.	Shut down/Switching off the machine	14
14.	Shrinking operation	15
15.	Maintenance	16
16.	Electrical schematic	16
17.	Troubleshooting	17
18.	Service log	19

1. FOREWORD

Thank you for choosing Sevana. You now belong to the Sevana family of over one million satisfied customers across the world. We are confident that you will have many years of complete satisfaction from this Sevana product.

We want you to derive maximum value from Sevana's reliable service and support infrastructure in India. We maintain Sevana's service mission of working continuously to provide customers with highest level of service, thereby ensuring mutually successful long term business association.

You can contact us through

Email	:	support@sevana.com	
Phone	:	+91-484-2680780	Monday to Saturday
Mobile	:	+91-9388180781	8.30 am – 5.00pm IST
Fax	:	+91-484-2680680	

We value your partnership

Yours sincerely

For Sevana Electrical Appliances Pvt. Ltd.

Manager in charge, Customer support

While contacting the support centre kindly provide the following information for a speedier support and service.

- Model
- Serial No
- The nature of problem

2. HOW TO USE THIS MANUAL

- Please read this manual carefully before installing and commissioning the machine.
- Please keep a copy of this manual for reference near the machine.

The information in this document is believed to be accurate and reliable. However, Sevana Electrical Appliances cannot accept any financial or other responsibilities that may result from the use of this information. No warranties are granted or extended by this document.

Sevana Electrical Appliances reserves the right to change any or all information contained herein without prior written notice. Revisions may be issued at the time of such changes and/or deletions.

3. SAFETY PRECAUTIONS

- Introduction
  Machines of Sevana have been designed to provide extremely safe and dependable operation when properly used. safety precautions must be observed during normal operation and when servicing the machines of Sevana.

- Warning
  A warning describes safety hazards or unsafe practices which could result in personal injury or loss of life. a warning message is accompanied by a symbol as described in the following paragraphs and is also surrounded by a box to attract your attention.

i.		This is a warning symbol indicating a hot surface.
ii.		This is a warning symbol indicating moving parts.

- The machine has to be grounded properly before using.
- Never try to shrink wrap explosive or inflammable material.
- Do not insert hand in the chamber when machine is in operation.
- Do not allow any liquid to go in to the machine.
- Do not keep shrinkable film on the machine.

4. PACKING CASE AND MACHINE DIMENSIONS

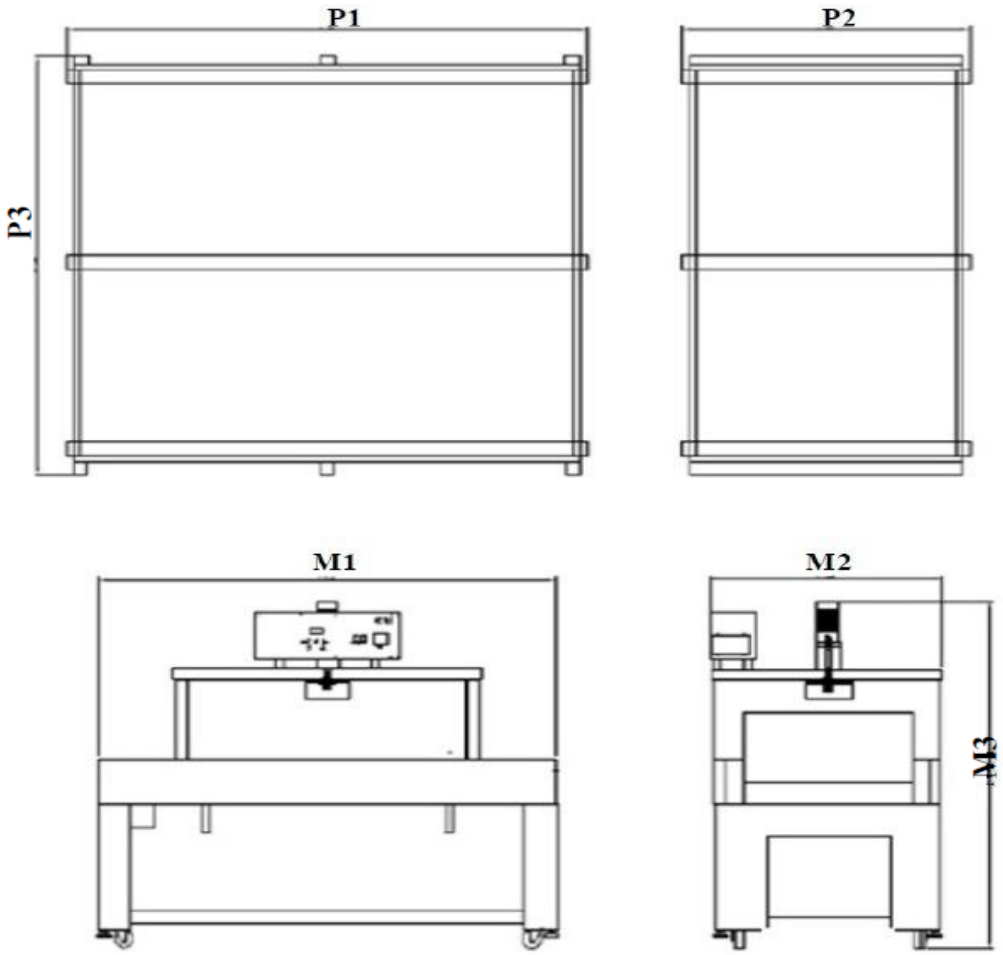

Model	MI	M2	M3	P1	P2	P3
3520 STV	1250mm	600mm	1420+100mm	1300mm	820mm	1450mm
4025 STV	1250mm	650mm	1470+100mm	1300mm	870mm	1550mm
5035 STV	1250mm	750mm	1570+100mm	1300mm	970mm	1650mm

5. PACKING SLIP

Item	Quantity
Machine	1
User manual	1
Double open-end wrench/spanner (10-11) *	1
Ring spanner/box-end wrench (10-11) *	1
Double open-end wrench/spanner 18-19*	1
Screw driver*	1
Tool storage box*	1

*Contains in disassembled and packed mode

6. TECHNICAL SPECIFICATIONS

Model		3520STV	4025STV	5035STV
Conveyor speed(m/min)		0-5	0-5	0-5
Travel time(s)		Variable	Variable	Variable
Window size(mm)	B	350	400	500
	H	200	250	350
Max. object size	B	300	350	450
	H	180	230	330
Power(KW)		6.6	6.6	8
Voltage(V)		415	415	415
Phase		3	3	3
Chamber length(mm)		900	900	900
Conveyor height(mm)		800+50	800+50	800+50
Dimension (mm)	L	1250	1250	1250
	B	600	650	750
	H	1420+100	1470+100	1570+100

7. UNPACKING

Note: Please verify the items with the packing slip.

- Inspect for any transit damages. If there are any, notify your dealer/transporter/insurance company or us immediately.
- The machine is shipped well packed in a wooden box with four bolts holding the machine to the bottom panel.
- Place the wooden box with the “TOP” marked to the top.
- Remove all the side panels and top panel of the box.
- Lift the machine with the crate using a pallet jack.
- Remove the packing bolts.
- The legs are separately packed and kept inside the box. Assemble the leg frame
- Place the machine on the top of the leg assembly and fasten the screws.
- Remove the transportation leg.
- Remove all packing materials.
- The conveyor chain is tied to arrest movements during transportation. Remove the tie.

Tools required to unpack
• Pry bar/Crowbar • Claw hammer

8. LIST OF PARTS

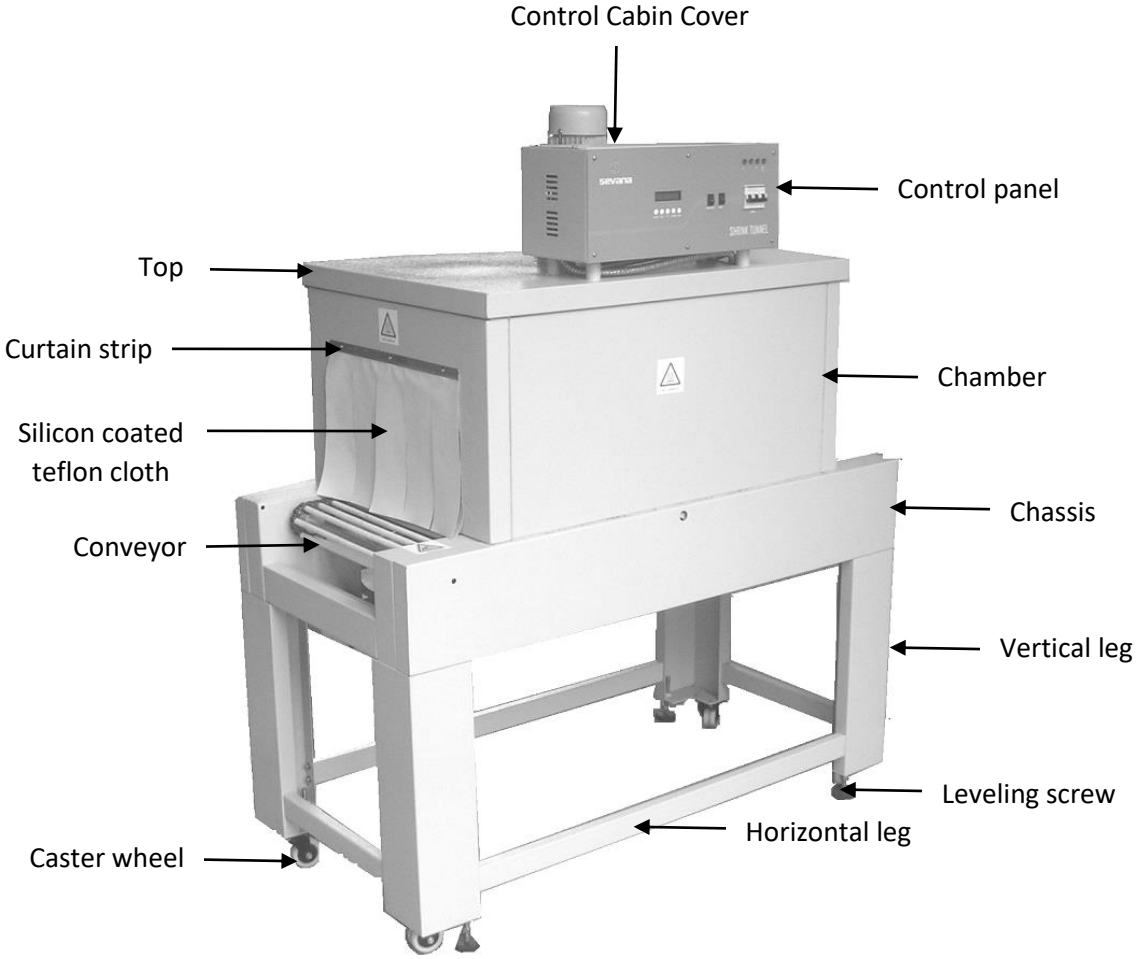

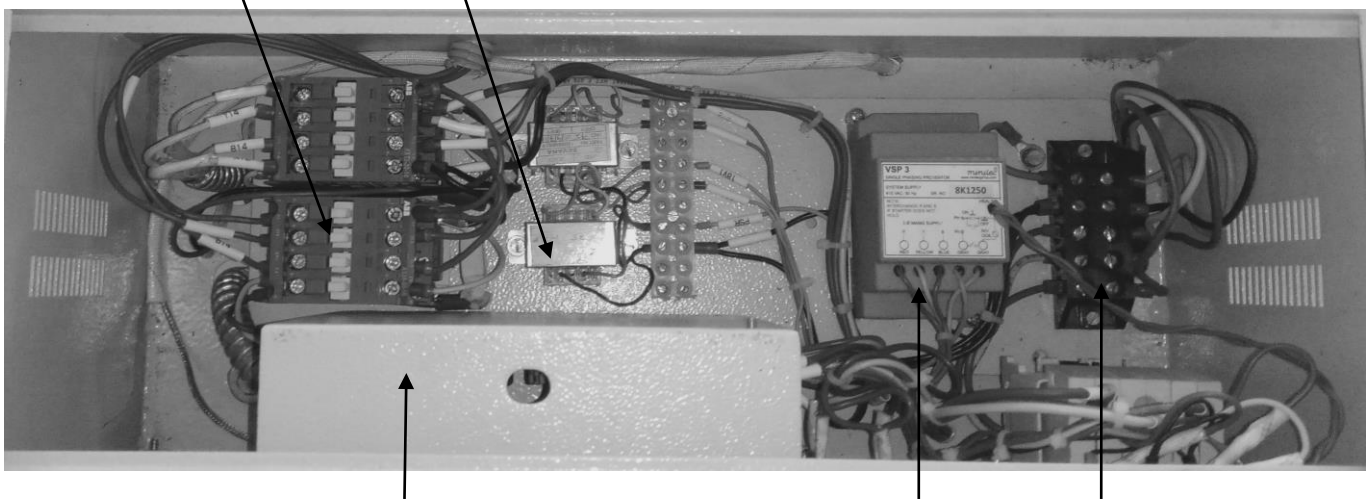

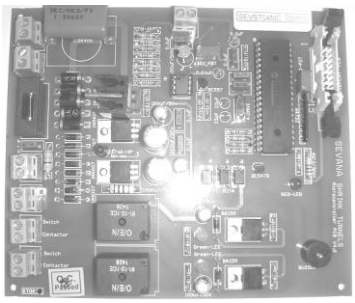

Microcontroller PCBA - ST V4.0

Display PCBA - ST V4.0

3P Blower motor

230V DC Motor

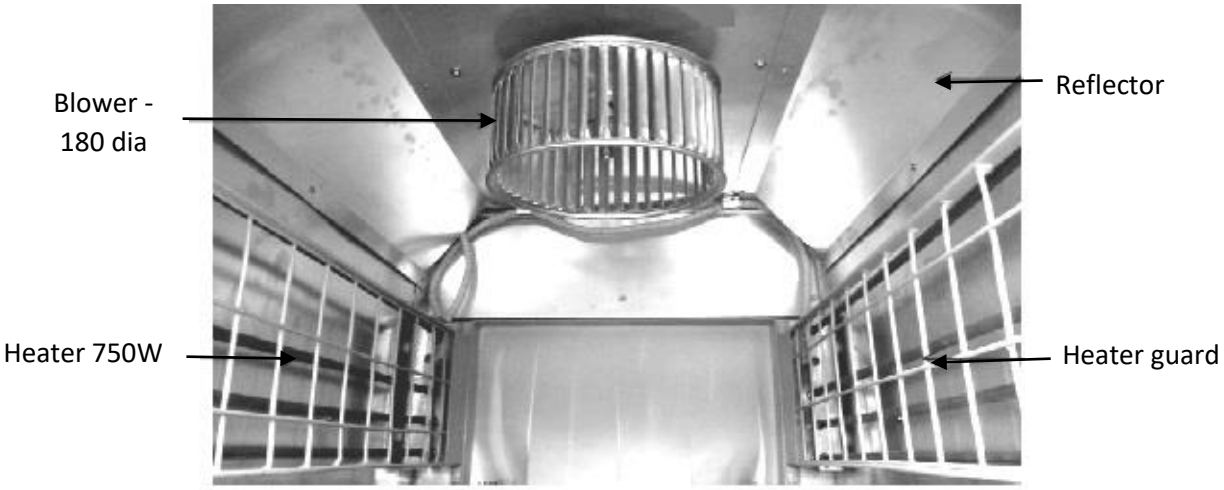
Blower -
180 dia
Reflector
Heater 750W
Heater guard

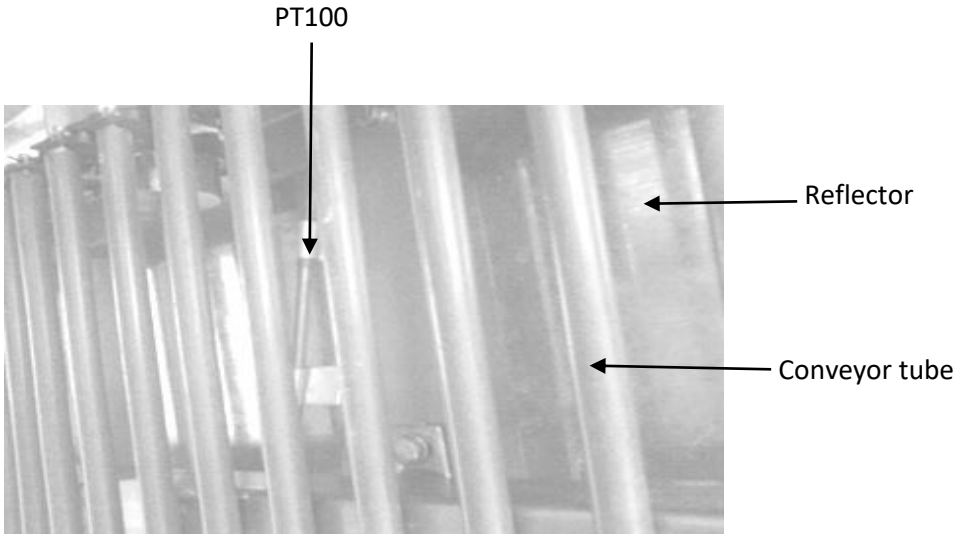
PT100
Reflector
Conveyor tube

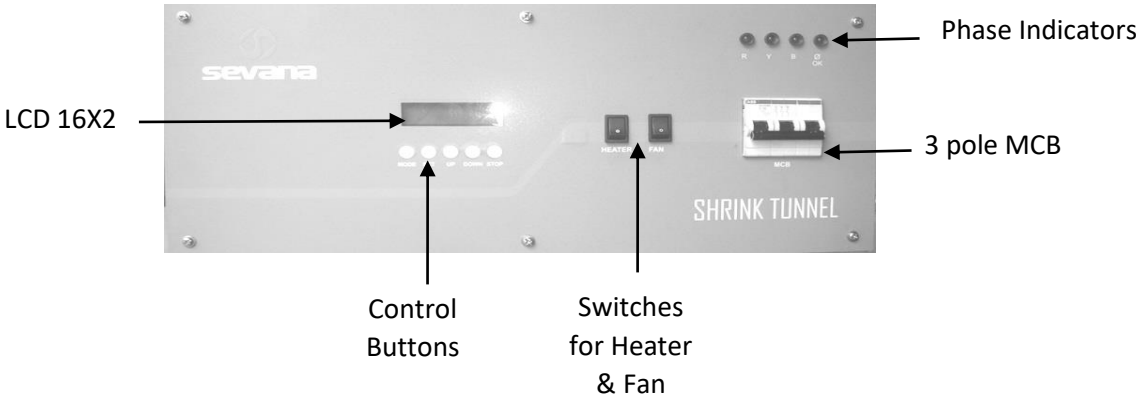
Phase Indicators
LCD 16X2
3 pole MCB
sevana
SHRINK TUNNEL
Control
Buttons
Switches
for Heater
& Fan

9. INSTALLATION

a. Fix the horizontal channel to the vertical legs with nuts and bolts provided along with the machine.

b. Keep the leg assembly thus made on level ground.

c. Place the chassis on the vertical leg assembly gently. Please ensure the corners are approximately aligned for ease of assembly.

d. Bolt vertical legs to the chassis with the bolts provided.

e. The leveling screws can be adjusted for leveling the machine and to adjust the height of machine slightly

f. Before starting the machine please ensure that,

- The chain is aligned with and rests on the chains rails the links of the chain properly engaged with the teeth of all the sprocket wheels.
- The conveyor tubes are perpendicular to the chains. If otherwise, move the lagging chain slightly forward to align the conveyor rods perpendicular to both the chains.

10. POWER CONNECTION

Machine is provided with five core cable.The connection to be made as follows: Red to Phase1, Yellow to Phase2, Blue to Phase3, Black to Neutral and Gray/Green to Earth. Then switch on the MCB. All the phase lamps RYB will light up and fourth lamp phase sequence OK will light up if all phase sequence is correct. If it does not, inter change any of the two phase line.

For machines without phase sequencer, turn on the blower fan and ensure that it spins anticlockwise, if not interchange any 2 phase after the motor become idle.

11. CONTROL PANEL

MCB
LEDs
Blower on/off switch
Heater on/off switch
Control buttons
LCD display

12. STARTING THE MACHINE

CONTROL BUTTONS :

- ❖MODE button
- ❖SET button
- ❖STOP button
- ❖DOWN button
- ❖UP button

To start the machine, connect the machine to appropriate power supply and switch on.

A LCD check function is done first; version of the software is displayed.

»»»»»»»»»»»»»»»» »»»»»»»»»»»»»»»»	SHRINK TUNNELS SEVANA Ver 4.0

The machine has 4 modes/program presets. Each mode preset parameters are

- Speed of conveyor
- Temperature of Chamber

These parameters can be modified by the operator if required(Each mode can be used for different type of films/products).

The machine will automatically go to the previously used mode after initializing. Now the temperature will be building up .

SPD:06 TEMP BUILDING UP

When the temperature is more than 50 degree a message “Not ready” is displayed as

NOT READY TEMP:107º SPD:09

When the temperature is built up to the preset level the message will change to “MODE:x, TEMP: xxx, SPD:xx” also an audio indication is also given.

MODE: 1 TEMP:150º SPD:09

PROGRAM MODES :

Sevana’s micro-processor based shrink tunnel machine has 4 preset modes or programs. Each program can be set with different parameters.

Variable parameters in each mode/program are:

- Temperature
- Speed

Temperature represents the temperature to be set in shrink chamber in degree Centigrade (°C). Speed represents the speed of conveyor (Minimum-maximum = 0-5 Meters per minute). Parameter values 0-20.

TO PRESET PROGRAM MODES :

Temperature	:	150
Speed	:	18

Select the mode by pressing “MODE” button

To set the temperature press “SET” button. It displays “Set Temperature”

SETTINGS TEMP:70ºC

To increase the temperature press the “UP” button continuously till the required value is displayed.

SETTINGS TEMP:150ºC

Press the “SET” button to save the values.

Now press the “UP” or “DOWN” button to increase or decrease the speed.

NOT READY TEMP:150º SPD:18

Any time pressing “UP” or “DOWN” button will increase or decrease the speed of the conveyor. The value is stored to the preset Mode/Program.

FEATURES: If the temperature sensor probe fails, a message will be displayed on the Digital Display

CHECK TEMPERATURE PROBE

13. SHUT DOWN/ SWITCHING OFF THE MACHINE

Press the “STOP” button.

COOLING DOWN TEMP:100º SPD:18

When the temperature is reduced to safe levels, the heaters, conveyor and fan is switched off automatically. A message is displayed when ready to switch off.

SAFE TO TURN OFF THE MACHINE

Now the power supply to the machine can be switched off.

14. SHRINKING OPERATION

a. Special plastic films which shrink on application of heat are used for shrink wrapping. The temperature required for shrinking each film varies and this information can be obtained from the film manufactures. Shrink films commonly available are,

- Low Density Poly Ethylene (LDPE)
- Poly Vinyl Chloride (PVC)
- Poly Olefin (POF)

b. Insert the article in a preformed sleeve or tube of shrinkable film of suitable size. Seal the open ends & make a few holes on the film by pricking it with a pin. The corners of the film may also be sealed cut off for better appearance. If open ends are desired, the ends of the tube need not be sealed. An L – Sealer can be used to make this easier and for better productivity.

c. Place the wrapped article on the conveyor at the inlet. The article will come out of the outlet properly shrunk. Inspect the article.

d. If the shrinking is not sufficient increase the temperature setting or reduce the conveyor speed. If over shrunk, reduce the temperature setting or increase the conveyor speed. By manipulating the temperature and conveyor speed one could get the best result and productivity. Make final adjustment of speed and temperature after the temperature has reasonably stabilized.

e. If POF or PVC film used, to avoid the conveyor rod marks on the product then adjust the conveyor rod support so that conveyor rod support will fret conveyor rods and the rod will rotate.

Shrink film	Thickness(Microns)	Conveyor speed	Temperature(^{o}C)
POF	8	1 - 6	140 - 160
PVC	40	1 - 6	120 - 140
LDPE	60	1 - 6	160 - 180

15. MAINTENANCE

Caution: Isolate electric power supply before doing the maintenance.

A) Daily Maintenance

1. Blow off the dust and film debris using a blower or compressed air.
2. Remove any plastic leftover on the conveyor rods or sleeves

B) Weekly maintenance.

1. Apply graphite grease on the chains
2. Check the conveyor chain tension. Adjust if required
3. Apply lubricant to other moving parts.

C) Monthly maintenance.

1. Inspect window curtains for damage.

D) Annual maintenance.

1. Inspect the conveyor chains. If they are elongated beyond Adjustable limits remove two links from either side.

16. ELECTRICAL SCHEMATIC

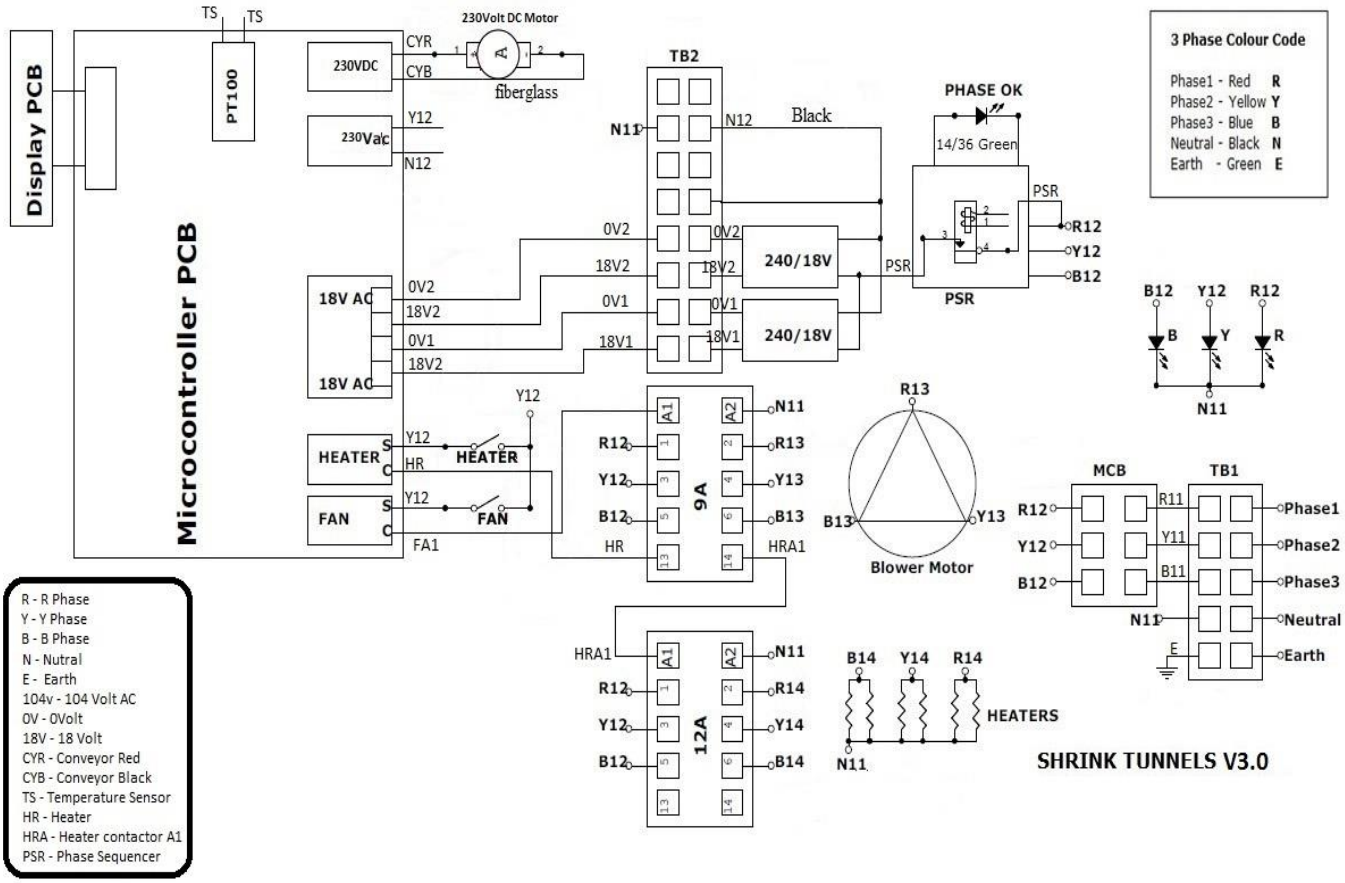

17. TROUBLE SHOOTING CHART

No.	Complaint	Reasons	Remedy
1	Machine does not work , three phase power indicating LEDs are not lighting up.	1.No AC supply. 2.MCB tripped. 3.No output from CT18V.	1.Restore AC supply. 2.Check the wiring for any short circuit. If satisfactory, reset the MCB. 3.Check and replace if defective.
2	Conveyor is not moving.	1.Conveyor speed set to 0. 2.Conveyor motor stalling. 3.Defective conveyor motor. 4.Wear & tear of carbon brush. 5.Conveyor chain disengaged from the sprockets. 6. Conveyor chain breakage. 7.Defective conveyor driver sprocket. 8.Defective conveyor drive board. 9. Blown out of FUSE. 10.Defective IRF740/optocoupler.	1.Increase the conveyor speed. 2.Reduce load on the conveyor. Install the machine with a slope towards the direction of the conveyor movements to increase the load carrying capacity of the conveyor. Use leveling screws to attain this. 3.Rectify/replace the conveyor motor. 4.Clean & reinsert it. 5.Engage the conveyor chain with the sprocket. 6.Replace both chain together to avoid the mismatching of chains. 7.Replace the conveyor driver sprockets. 8.Replace the board for conveyor drive. 9.Replace the FUSE. 10.Replace it.
3	Conveyor chain slips from the guides.	1.Lower conveyor tension. 2.Misalignment of sprockets and chain rails.	1.Increase the tension by adjusting the conveyor tension adjusters. 2.Align the sprockets and chain rails.
4	Air blower is not working	1.Fan switch is off. 2.Phase sequence RYB is not in sequence. 3.Defective blower motor. 4.No supply at motor end. 5.Defective contactor or relay.	1.Switch on the fan. 2.Interchange any of the two phases. 3.Replace the motor. 4.Check supply voltages at the motor end. 5.Replace the defective.
5.	Blower motor works , but the air turbulence fan does not rotate freely	1.Shaft fitting Allen screw loose.	(a) Check the fan shaft assembly. (b) Ensure free rotation of the shaft and a little axial play. (c) Refit the Fan Assembly Mounting Plate.
6.	Insufficient shrinking	1.Heater switch is off. 2.Low temperature setting.	1.Switch on the heater. 2.Increase the temperature setting.

		3.Temperature is not building up.	3.Refer to complaint no. 7
7.	Temperature is not building up.	1.Loose connection of heaters. 2.Heater failure. 3.Low temperature setting. 4.Defective contactor for heaters/relay for heaters. 5.Defective PT100.	1.Make proper connections. 2.Replace the defective heater. 3.Increase temperature setting. 4.Replace the relay from the board/ replace the contactor. 5.Replace it.
8	Excessive Shrinking	1.High temperature setting. 2.Low conveyor speed. 3.Defective Temperature Sensor (PT100). 4.Defective Heater Contactor or relay due to contact welding.	1.Reduce the temperature setting. 2.Increase the conveyor speed. 3.Replace the defective part. 4.Replace the contactor for heater.
9.	Shrinking is not uniform	1.Air turbulence fan is not working or rotating in wrong direction. 2.Heaters are not working.	1.Refer complaint troubleshooting Case 4. 2.Identify the defective heater and replace.
10.	Abnormal sound and vibration	1.Air turbulence fan loose. 2.Fan Motor Bearing failure. 3.Machine is not installed on a level surface.	1.Tighten the nut with which the Air Turbulence Fan is attached to the blower drive shaft. 2.Replace the defective bearing. 3.Level the machine using the leveling screws.
11.	Conveyor is Moving at constant speed	1.Defective IRF740 in the PCB	1.Replace PCB or IRF740 in the PCB
12.	Shows different Temperature values	1.Defective 18V CT 2.EMI problems	1.Replace 18V CT 2.Make proper FRC & other cable routing.
13.	Garbage values/ Display black out when heaters are turned on..	1.EMI generated through contactor arcing.	1.Replace contactor connections for loose terminals. 2.Connect a 220ohm resistor and a 104/1kv capacitor in series across A1 and A2 of contactor. 3. Replace Contactor.

18. SERVICE LOG

Date	Complaint	Correction	Name of technician