AN ISO 9001:2015 CERTIFIED COMPANY

USER MANUAL

Double-chamber Vacuum machine

600VS Twin

www.sevana.com

YOUR PACKAGING PARTNER

CONTENT

Sl no	Description	Page no
1.	Foreword	3
2.	How to use this manual	4
3.	Safety precautions	4
4.	Product description	5
5.	Packing SLip	5
6.	Unpacking	6
7.	Installation	6
8.	Filling vacuum pump with oil	6
9.	Maintenance	7
10.	List of parts	8
11.	Technical specifications	14
12.	Control panel	14
13.	Program modes	15
14.	Starting the machine	16
15.	Operation	18
16.	Electrical schematic	19
17.	Troubleshooting	20
18.	Service log	22

1. FOREWORD

Thank you for choosing Sevana. You now belong to the Sevana family of over one million satisfied customers across the world. We are confident that you will have many years of complete satisfaction from this Sevana product.

We want you to derive maximum value from Sevana's reliable service and support infrastructure in India. We maintain Sevana's service mission of working continuously to provide customers with highest level of service, thereby ensuring mutually successful long term business association.

You can contact us through

Toll Free	:	18004250780	
Email	:	customercare@sevana.com	
Phone	:	+91-484-2680780	Monday to Saturday
Mobile	:	+91-9388180781	8.30 am – 5.00pm IST

We value your partnership

Yours sincerely

For Sevana Electrical Appliances Pvt. Ltd.

Manager in charge, Customer support

While contacting the support center kindly provide the following information for a speedier support and service.

i. Model

ii. Serial no.

iii. The nature of problem

2. HOW TO USE THIS MANUAL

- Please read this manual carefully before installing and commissioning the machine.
- Please keep a copy of this manual for reference near the machine.

The information in this document is believed to be accurate and reliable. However, Sevana Electrical Appliances Pvt Ltd, cannot accept any financial or other responsibilities that may result from the use of this information. No warranties are granted or extended by this document.

Sevana Electrical Appliances reserves the right to change any or all information contained herein without prior written notice. Revisions may be issued at the time of such changes and/or deletions.

3. SAFETY PRECAUTIONS

- Introduction

Machines of Sevana have been designed to provide extremely safe and dependable operation when properly used. Safety precautions must be observed during normal operation and when servicing the machines of Sevana.

- Warning

A warning describes safety hazards or unsafe practices which could result in personal injury or loss of life. A warning message is accompanied by a symbol as described in the following paragraphs and is also surrounded by a box to attract your attention.

Open the back cover of the machine only after isolating the power supply

Check the oil level of the vacuum pump regularly

4. PRODUCT DESCRIPTION

5. PACKING SLIP

Item	QS500VSG
User manual	1
Warranty card	1
Heating element	1.4mtr
Vacuum pump oil	2 liters
Allen key 10mm	1
Screwdriver	1
Double-end spanner 12-14	1
Allen key 5mm	1
Allen key 6mm	1
Teflon tape two side gum	1.25mtr

6. UNPACKING

- The machine is shipped well-packed in a wooden box.
- Place the packing box with the panel marked “Top” facing upwards.
- Remove the four sides and the top panel of the packing box.
- The machine comes with 4 caster wheels. Push the machine to ground level.
- Remove the stretch wrapping film wrapped around the machine.
- Inspect for any transit damage. If any damage is found, notify the dealer or the company immediately.

Tools required to unpack
• Pry bar/Crowbar • Claw hammer

7. INSTALLATION

- Open the side door & fill the vacuum oil.
- Give three-phase power & check the phase sequence indicator.
- Switch on the MCB & then press the power button on the front panel.
- Set parameters (vacuum level, sealing time & cooling time) as per product & pouch.
- Shutdown process: switch off the MCB.

8. FILLING VACUUM PUMP WITH OIL

There is no vacuum pump oil in the newly delivered machine. If the vacuum pump works without oil it will damage the pump, even in a short time. Please make sure that the vacuum pump has been filled with the oil up to the mark before the start-up.

a. Open the side cover.

b. Fill the vacuum pump with Sevol V/equivalent vacuum pump oil.

c. Make sure the oil level is between 1/2 and 3/4 of the oil level indicator.

d. Wait for 3 minutes.

e. Check the oil level is between 1/2 and 3/4 of the oil level indicator. If it is less than 1/2, please add more.

f. If the oil level is between 1/2 and 3/4 of the oil level indicator then close the cap and fix the side door.

9. MAINTENANCE

CAUTION : Remove mains cord before maintenance.

Clean the machine daily after use.

Clean element and element bed to remove any adhesive deposited on it.

Check the oil level every week.

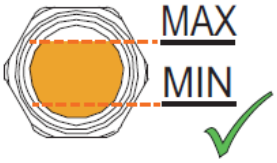

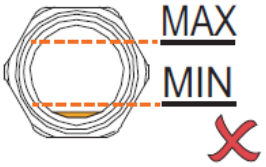

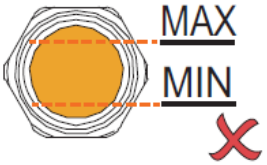

Replace oil after every 5000-cycle count or every 2 months depending upon production. If the product contains moisture (like paneer, fish, meat etc.), replace oil after every 1 month.

Note: Use vacuum pump grade oil. Common automotive lubricants must not be used. We recommend using SEVANA vacuum pump oil.

An "Oil change" message will be displayed upon the completion of every 5000 operation cycles. Drain out the existing oil and pour in new oil as per instructions. Then press the UP and DOWN buttons together to reset the Oil alarm.

Regularly inspect the gasket, teflon cloth and teflon tape. Replace these depending on the condition.

10. LIST OF PARTS

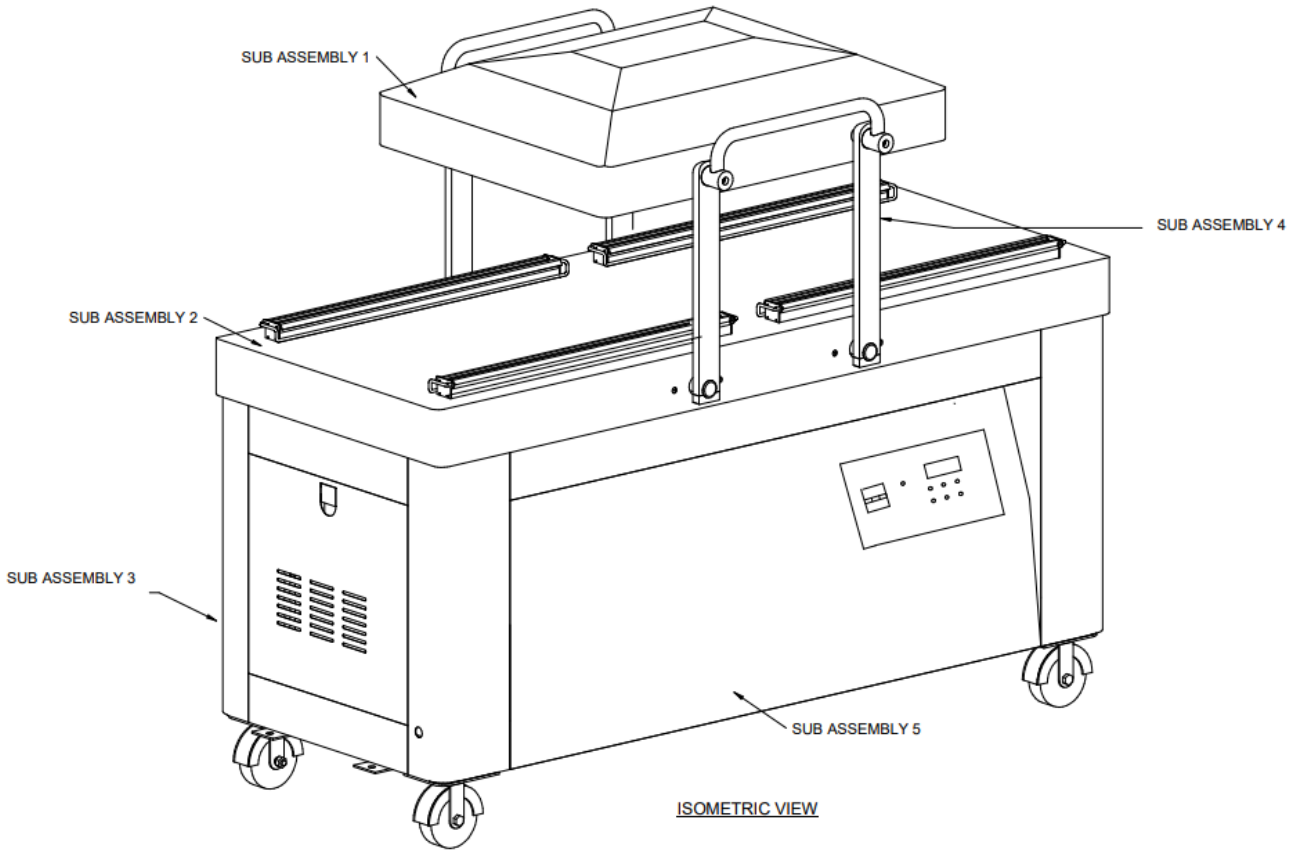

ASSEMBLY NUMBER	PART DESCRIPTION
SUB ASSEMBLY 1	DOME LID
SUB ASSEMBLY 2	FLAT CHAMBER
SUBASSEMBLY 3	CHASSIS
SUB ASSEMBLY 4	SWING ARM
SUB ASSEMBLY 5	FRONT PANEL

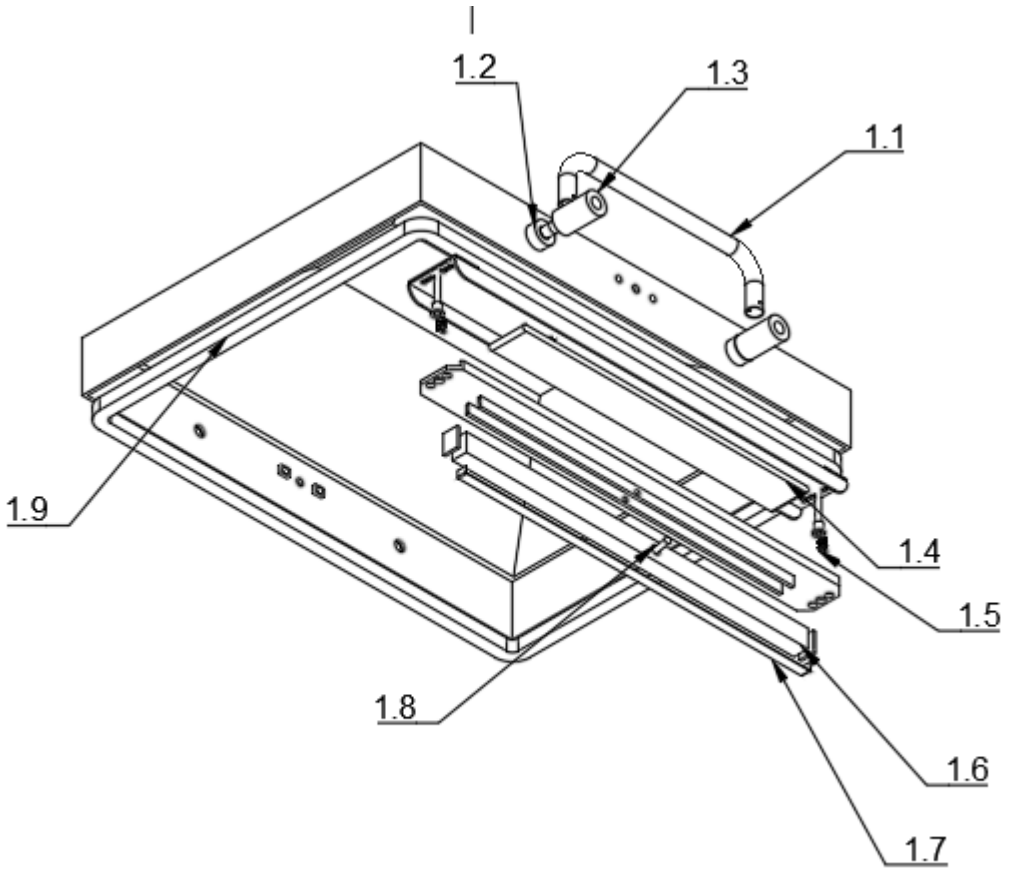

NO	ITEM DESCRIPTION	ITEM CODE
1.1	LID HANDLE	1060233
1.2	SWING ARM HOLDING PIN	1015191
1.3	HANDLE SEAT	1060232
1.4	AIR BAG ASSEMBLY	1060092
1.5	ELEMENT BED SPRING	1024049
1.6	ELEMENT BED ASSEMBLY	1060252
1.7	ELEMENT	2000051
1.8	ELEMENT BED FIXING PIN	1025394
1.9	LID GASKET	2000008

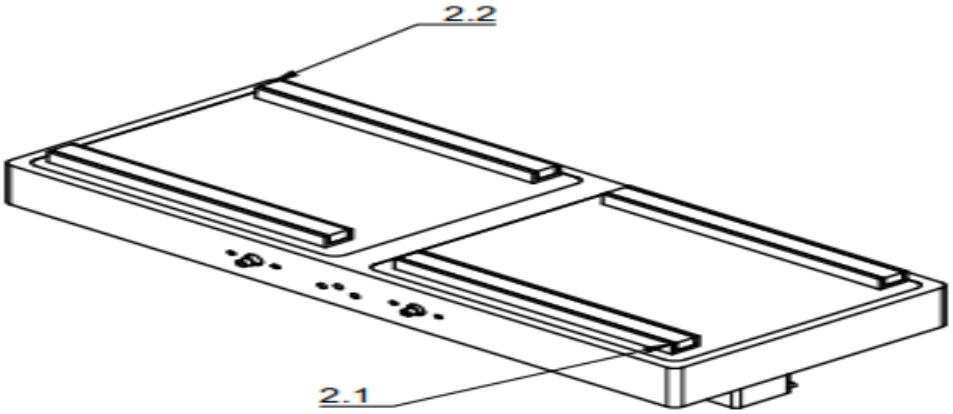

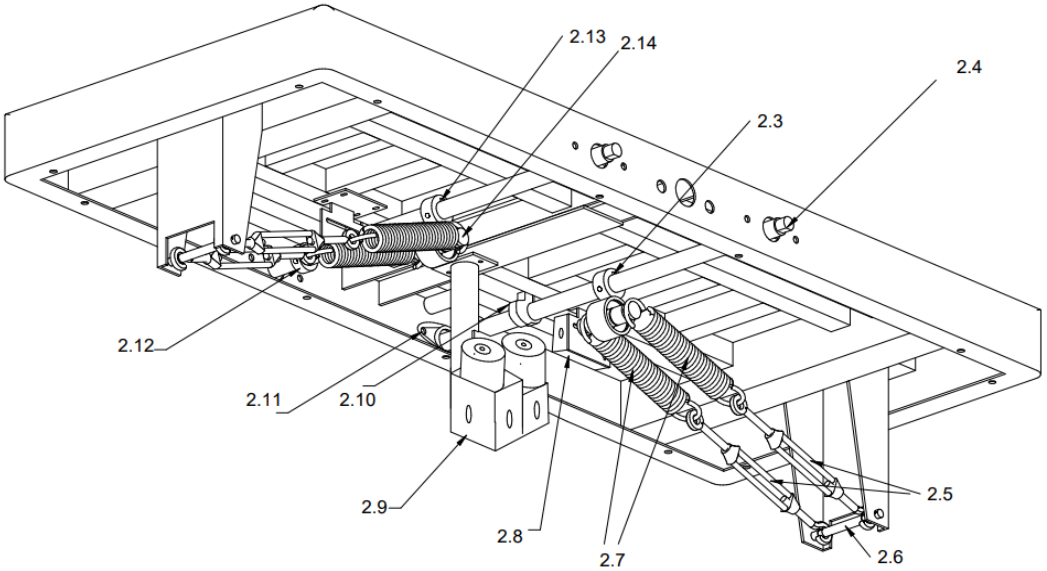

NO	ITEM DESCRIPTION	ITEM CODE
2.1	SEALING GASKET	2000121
2.2	GASKET HOLDER	1060536
2.3	SHAFT KEY	1060568
2.4	SWING ARM SHAFT	1015198
2.5	TENSION BUCKLE	1060118
2.6	SPRING HOLDING SHAFT	1015190
2.7	TENSION SPRING	1060825
2.8	MICRO SWITCH	1023109
2.9	SOLENOID VALVE ASSEMBLY	1060216

2.10	TRAVEL SWITCH BLOCK	1006138
2.11	UCFL 205 BEARING	1002019
2.12	SHAFT LOCK RING	1015199
2.13	SPRING SHAFT LOCK RING	1006136
2.14	SPRING MOUNTING SHAFT	1015200

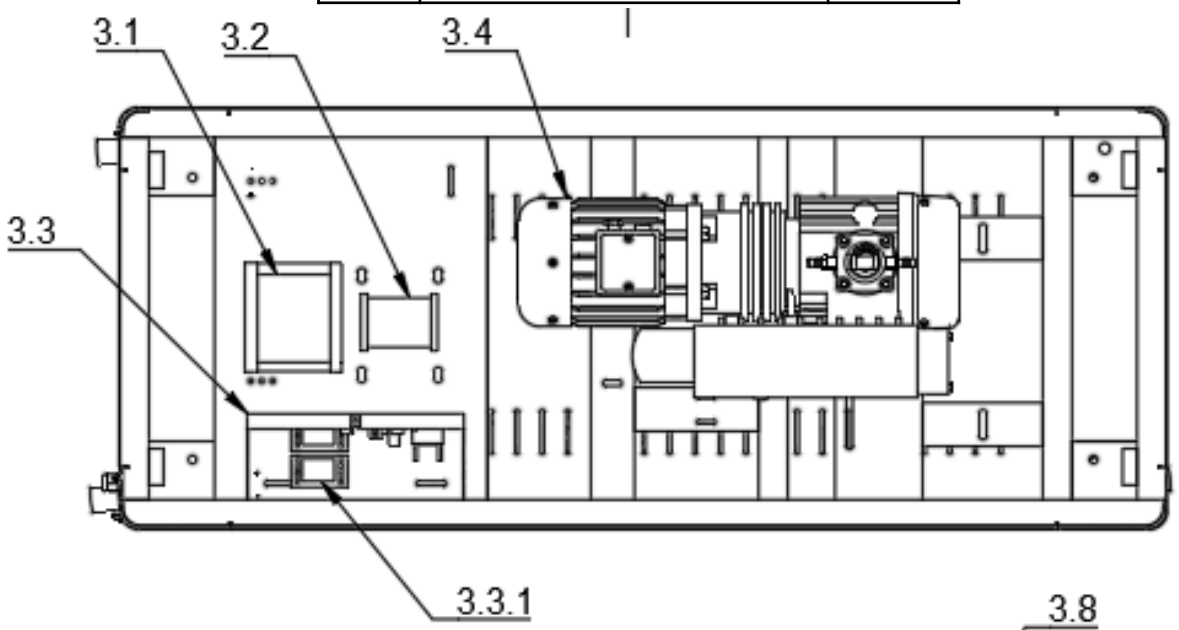

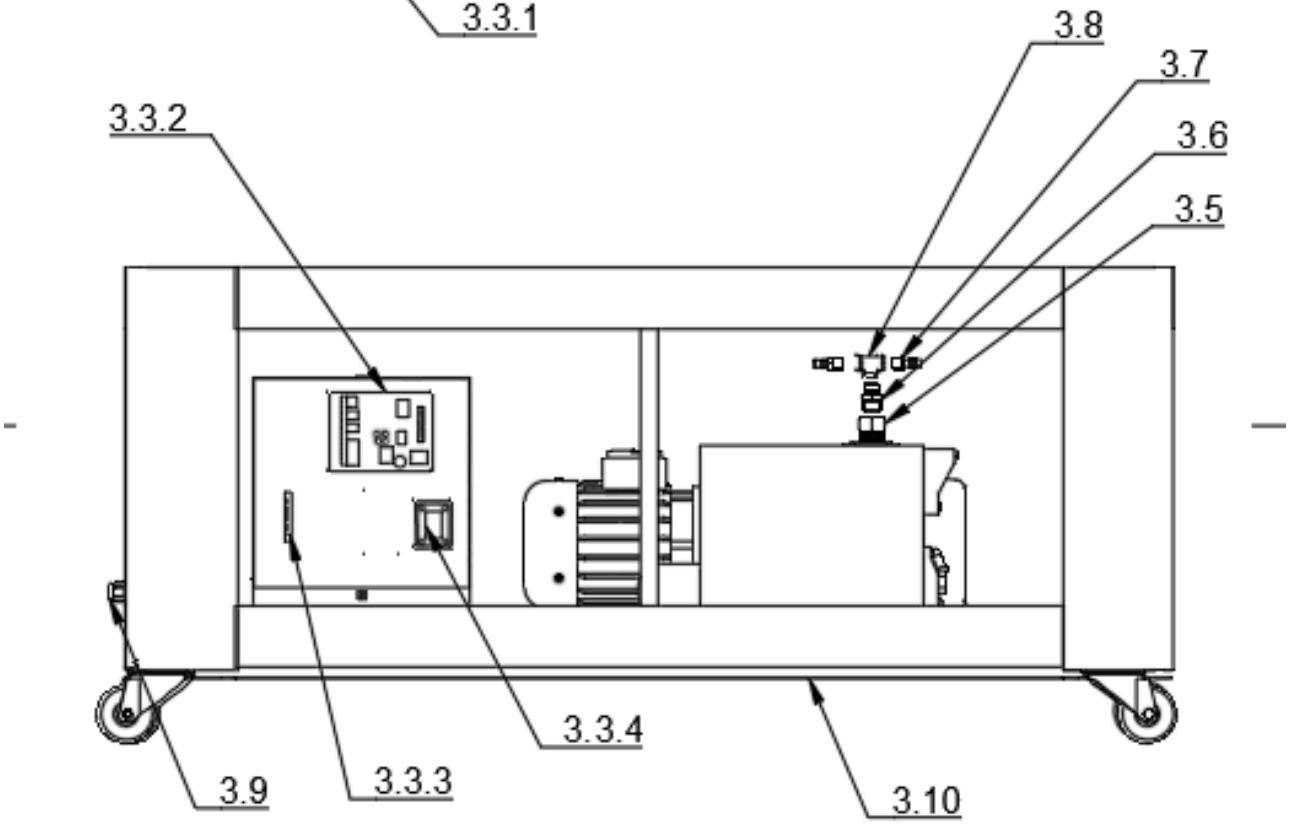

No.	PART DESCRIPTION	SAP CODE
3.1	SEALING TRANSFORMER	1060021
3.2	TRANSFORMER 24 VOLT	1060258
3.3	RELAY CABIN	1023894
3.3.1	PHASE FAILURE RELAY	1031565
3.3.2	RELAY PCB	1061172
3.3.3	CONTROL TRANSFORMER	1061188
3.3.4	TERMINAL BLOCK	1022057
3.4	VACUUM PUMP	1047036
3.5	REDUCER	1049231
3.6	NIPPLE	1049726
3.7	HOSE HOLDER	1045233
3.8	TEE	1050123
3.9	CABLE GLAND	1050305
3.10	BOTTOM GUARD	1015171

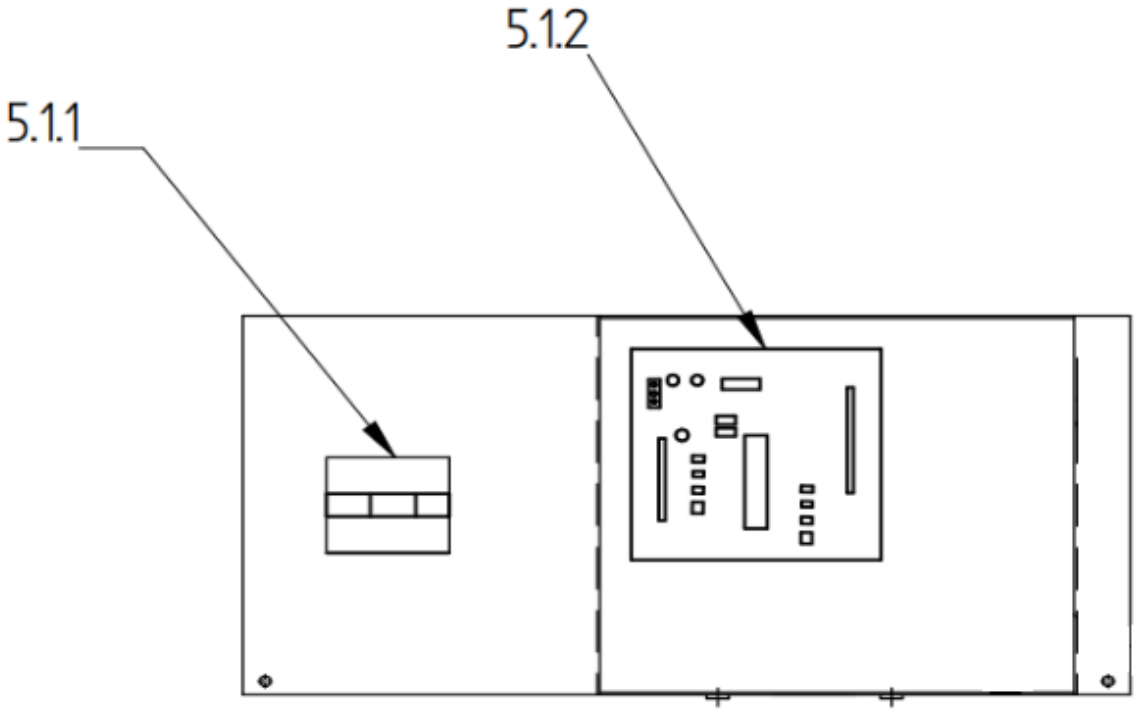

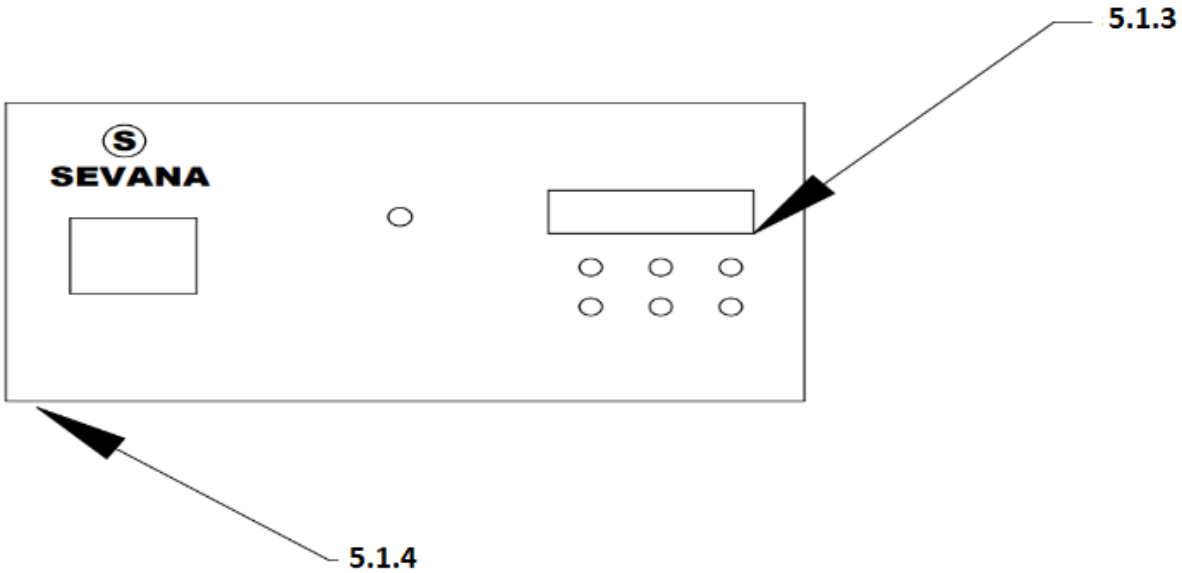

No.	PART DESCRIPTION	SAP CODE
5.1.1	MCB 3 POLE	1022019
5.1.2	MICROCONTROLLER PCB	1061189
5.1.3	DISPLAY PCB	1033034
5.1.4	ACRYLIC	1032011

11. TECHNICAL SPECIFICATIONS

Model	QS600VSTWINBV2
Machine's dimensions (LxWxH)(mm)	1470 x 815 x 1250
Chamber dimensions (LxWxH)(mm)	750 x 600 x 180
Sealing dimensions (LxW)(mm)	600 x 10
Seal to seal distance(mm)	430mm
Voltage/frequency	415V/50Hz/3P
Power	3KW
Pump capacity	$63m^3/h$

12. CONTROL PANEL

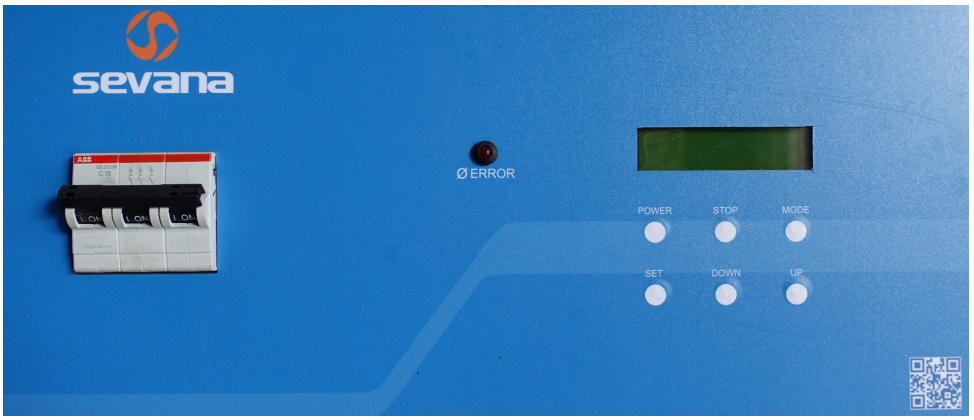

- LCD display
- Control buttons
- Phase indicator
- MCB 3 pole

13. PROGRAM MODES

Sevana's micro-processor-based vacuum machine has 3 preset modes or programs. Each program can be set with different parameters. Variable parameters in each mode are

PARAMETER	Vacuum Mode	Timer Mode
Vacuum level	0-100.0%	0-40 Sec
Sealing time	0.0 - 4.0 Sec	0.0 - 4.0 Sec
Cooling time	1 - 9 sec	1 - 9 sec
Vacuum error	ON/OFF	-

To change the modes, first press the Mode button. The display will show like below,

Vacuum Mode
To Change UP/DOWN

Next, use the Up or Down button to navigate and select the desired mode. Finally, press the Mode button again to save the selected mode. If no action is taken within 8 seconds, the display will return to its default condition

If only vacuum is required, select Vacuum mode.

Vacuum Mode
Ready

If required Timer mode, select Timer mode.

Timer Mode
Ready

To set the parameters press the "SET" button.

Vacuum Mode
Vacuum: 100.0%

To change the vacuum, continuously press the "UP" or "DOWN" button until the required value is displayed.

To select the next parameter press SET again.

Vacuum Mode
Sealing: 1.5Sec

Vacuum Mode
Cooling:5Sec

Vaccum Mode
Vacuum error:OFF

If again presses SET, the machine will go to READY. Vacuum Error ON/OFF option is given with vacuum mode for vacuuming the Frozen Products. If the vacuum error is OFF, the machine will proceed to the sealing process after 40 seconds if the vacuum level does not reach the set value.

14. STARTING THE MACHINE

CONTROL BUTTONS:

- Power
- Stop/Reset
- Mode
- Set
- Up
- Down

A LCD check function is done first. A version of the software and the count is displayed.

Initializing……

SEVANA QS VAC 7.00

SEVANA Count:00010

The set parameters can be modified by the operator if required. The machine will automatically go to the previously used mode after initializing.

Vacuum Mode Ready

Now the lid is closed, the vacuum increases up to the preset level.

Vacuum Mode Vacuum 95.0%

When the preset vacuum pressure value is reached, sealing will be ON. After cooling ON

Vacuum Mode Sealing on

Vacuum Mode Cooling on

After that the lid opens automatically and the display changes to “ready”.

Vacuum Mode Fresh air

Vacuum Mode Ready

In Timer Mode, all parameters are configured in seconds. The pump activates based on the designated vacuum duration. Balance working is the same as vacuum mode.

Timer Mode Pump On

TO RESTART THE MACHINE:

Press the “STOP” button for 1 second.

Initializing……	SEVANA QS VAC 7.00
SEVANA Count:00010	Vacuum Mode Ready

Service Mode:

Service mode is not intended for production purposes. It is primarily used to check for air leakage and to view and reset the count. In this mode, upon pressing the set button, the display will indicate the vacuum value. To activate the pump, press the UP button, and to deactivate it, press the down button.

Strt:UP	Off:Down
Vacuum:000.0%	

To check the air leakage, press the UP button and close the lid. The vacuum pump will turn on, and the vacuum value will increase. Once it reaches the maximum vacuum or after 40 seconds, press the down button to stop the vacuum pump. If there is air leakage in the machine, the vacuum value will decrease rapidly. You can identify the location of the air leakage by carefully listening to the sound of air sucking at this time.

After that press the set button to release the lid. Also, it shows the count of production

Rst Pres Up&Down
Prod Count:00010

Pressing both the UP and DOWN buttons simultaneously will reset this count.

Again pressing the set button will show the Oil change count.

Oil Change
Count:0010

Every 5000 cycles the machine will give the notification for oil changing.

Check Oil Level
Press Up+Down

After showing this indication, please check or replace the vacuum oil and press the UP and Down buttons simultaneously.

15. OPERATION

- Switch on the supply
- Adjust the vacuum and other parameters
- Select the required mode
- Insert the product into the film pouch and then place it in the vacuum chamber in such a way that the open end of the pouch is in between sealing element and jaw.
- Close the lid.
- After the operation cycle, lift the lid and inspect the product.
- Machine is now ready for the next operation.

16. ELECTRICAL SCHEMATIC

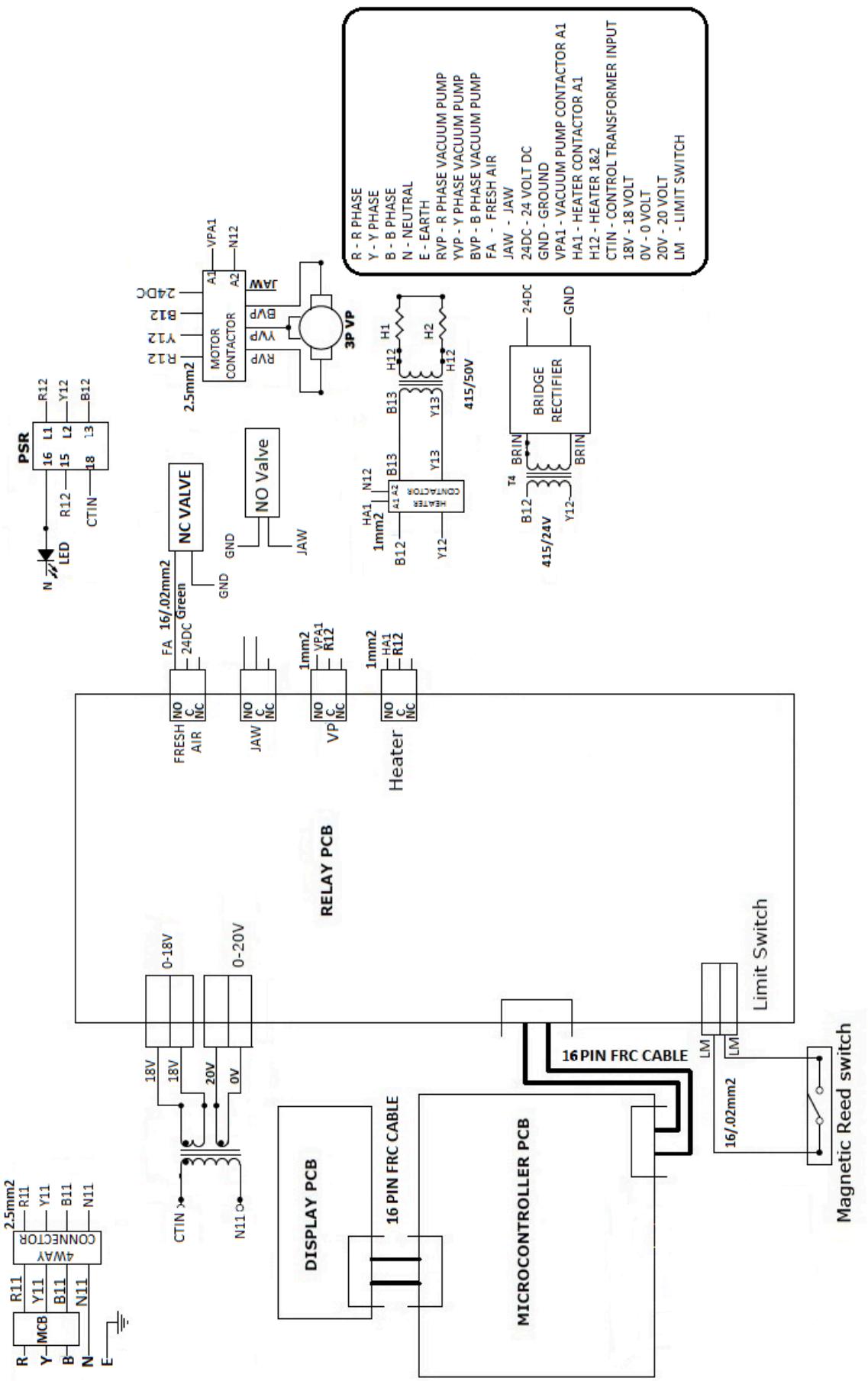

17. TROUBLESHOOTING

No.	Complaint	Reasons	Remedy
1	Machine does not work; Phase sequence LED light up	1.Absence of one phase. 2.Mains cord failure. 3.MCB failure. 4.Phases are not in sequence. 5.Imbalance between phases.	1.Restore AC supply. 2.Replace mains cord. 3.Replace the MCB. 4.Inter change any two phase lines.
2	Vacuum pump does not work when lid is closed and vacuum level is always displayed	1.Defective contactor (coil open or contact burned out). 2.Defective relay pcb. 3.Defective vacuum pump.	1.Replace the contactor. 2.Replace the relay board. 5.Replace or rectify the vacuum pump.
3	The lid does not remain closed even after vacuum pump starts	1.Lid gasket does not touch the chamber face uniformly.	a.Press the lid. b.Check the height of swing arm. If the height is optimum, the gasket will touch the chamber uniformly.
4	Insufficient Vacuum Reading	1.Low vacuum setting 2.Solenoid valve leaks: atmospheric air enters in to the chamber through the solenoid valve due to, a)Defective solenoid valve. b)Defective relay. 3.Low oil level in the vacuum pump. 4.Moister contaminated oil. 5.Vacuum leaks through lid gasket/bolt holes on the lid/pipe joints/bushes at cable entry. 6.Wear and tear of vanes of vacuum pump. 7.Defective microcontroller Board.	1.Increase the vacuum setting. 2. a)Replace the solenoid valve. b)Replace relay board. 3.Keep the required oil qty in the vacuum pump. 4.Drain the oil completely and refill. 5.Identify the location of leakage and replace the defective components or rectify the problem by tightening the joints. 6.Overhaul /replace the pump. 7.Replace the defective.
5	Sealing head operate but sealing does not takes place	1.Low sealing time setting. 2.heating element failure. 3.Defective sealing transformer.	1.Increase sealing time. 2.Replace heating element. 3.Replace defective sealing transformer.
6	Machine halts after sealing	1.Defective air inlet solenoid Valve. 2.Selection of Mode is wrong	1.Replace solenoid valve. 2.Set correct Mode.
7	Pouch expands during vacuum time	1.Low gap between sealing head and pad holder assembly. 2.Defective solenoid valve	1.Increase the gap by adjusting the pad holder assembly. 2.Replace defective.
8	Nonuniform sealing	1.High gap between sealing head and pad holder assembly.	1.Reduce the gap.

		2.Sealing head and pad holder not align properly. 3.Burnt Teflon fabric.	2.Align sealing head and pad holder. 3.Replace the Teflon fabric.
9	Machines works fine, but blank/garbage display	1.Defective display. 2.FRC cable of display or its connector defective.	1. Replace display board. 2.Replace cable and connector.
10	Setting is not possible. The Microcontroller does not responding to push button pressing.	1.Defective switches. 2.Defective FRC Cable of Display PCB	1.Replace display board. 2.Replace cable and connector.
11	System hangs during operation	1.Temporary bug in program due to noise. 2.Defective micro controller board.	1.Switch off and restart the machine. 2.Replace Microcontroller board.
12	Overheating of Heating element/Transformer	1.Short circuit with body of machine. 2.Defective Relay PCB/Contactor	1.Make proper wire connections. 2.Replace the defective.
13	Machine trips while pump starts working or abnormal sound of pump.	1.Winding short with body. 2.Defective centrifugal switch. 3.Defective love jaw coupling bush.	1.Rewind or replace the pump. 2.Replace the switch or pump. 3.Replace the bush or pump.
14	Lid doesn’t open after completing the operation.	1.Defective relay in the relay board. 2.Solenoid valve coil burned out.	1.Replace it. 2.Replace the solenoid valve.
15	Display shows fresh air always	1.Misalignment of micro switch. 2.Defective micro switch.	1.Correct the position. 2.Replace the switch.
16	24V Transformer Fuse blown out.	1. Solenoid coil burned out.	1.Replace it.

18. SERVICE LOG

Date	Complaint	Correction	Name of technician