AN ISO 9001:2008 CERTIFIED COMPANY

USER MANUAL

Double-chamber Vacuum machine

600VSG Twin

www.sevana.com

YOUR PACKAGING PARTNER

CONTENT

Sl no	Description	Page no
1.	Foreword	3
2.	How to use this manual	4
3.	Safety precautions	4
4.	Case and machine dimensions	5
5.	Technical specifications	6
6.	Installation	6
7.	Filling vacuum pump with oil	6
8.	List of parts	7
9.	Control panel	11
10.	Program modes	12
11.	Starting the machine	13
12.	Operation	14
13.	Maintenance	15
14.	Electrical schematic	15
15.	Trouble shooting	16
16.	Service log	18

1. FOREWORD

Thank you for choosing Sevana. You now belong to the Sevana family of over one million satisfied customers across the world. We are confident that you will have many years of complete satisfaction from this Sevana product.

We want you to derive maximum value from Sevana's reliable service and support infrastructure in India. We maintain Sevana's service mission of working continuously to provide customers with highest level of service, thereby ensuring mutually successful long term business association.

You can contact us through

Email	:	support@sevana.com	
Phone	:	+91-484-2680780	Monday to Saturday
Mobile	:	+91-9388180781	8.30 am – 5.00pm IST
Fax	:	+91-484-2680680	

We value your partnership

Yours sincerely

For Sevana Electrical Appliances Pvt. Ltd.

Manager in charge, Customer support

While contacting the support centre kindly provide the following information for a speedier support and service.

i. Model
ii. Serial no.
iii. The nature of problem

2. HOW TO USE THIS MANUAL

- Please read this manual carefully before installing and commissioning the machine.
- Please keep a copy of this manual for reference near the machine.

The information in this document is believed to be accurate and reliable. However, Sevana Electrical Appliances Pvt Ltd, cannot accept any financial or other responsibilities that may result from the use of this information. No warranties are granted or extended by this document.

Sevana Electrical Appliances reserves the right to change any or all information contained herein without prior written notice. Revisions may be issued at the time of such changes and/or deletions.

3. SAFETY PRECAUTIONS

❖ Introduction

Machines of Sevana have been designed to provide extremely safe and dependable operation when properly used. Safety precautions must be observed during normal operation and when servicing the machines of Sevana.

❖ Warning

A warning describes safety hazards or unsafe practices which could result in personal injury or loss of life. A warning message is accompanied by a symbol as described in the following paragraphs and is also surrounded by a box to attract your attention.

Open the back cover of the machine only after isolating the power supply

Check oil level of vacuum pump regularly

4. CASE AND MACHINE DIMENSIONS

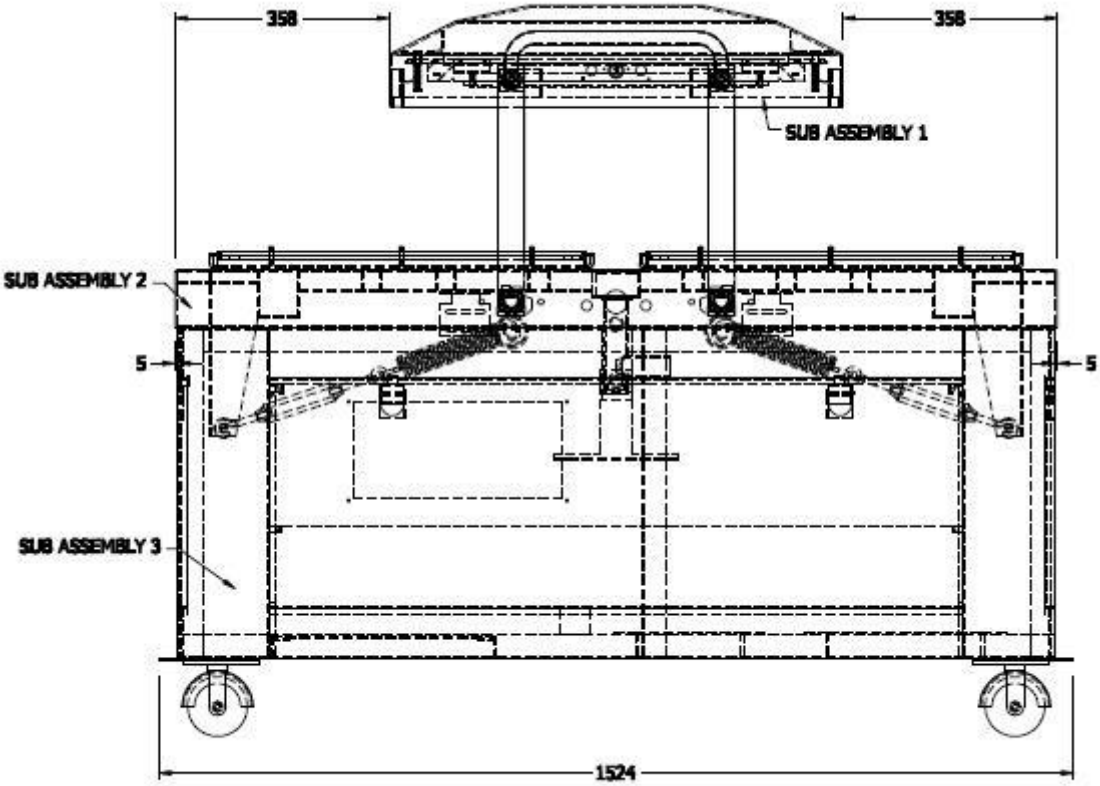

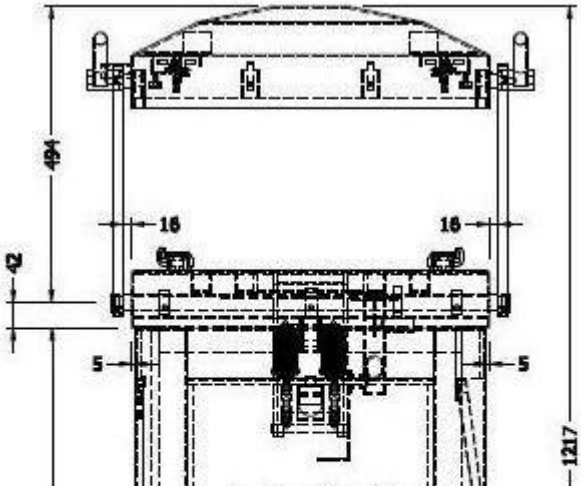

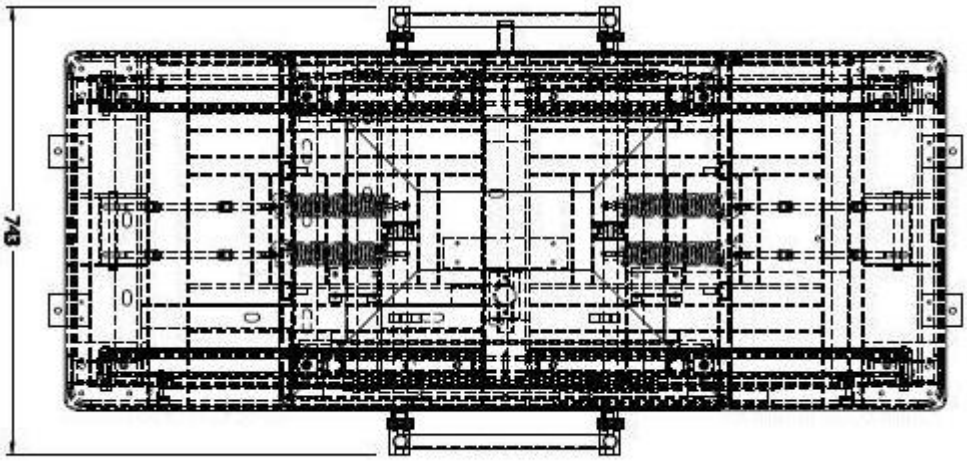

5. TECHNICAL SPECIFICATIONS

Model	600VS Twin	600VS TwinB
Machine's dimensions (LxWxH)(mm)	1470 x 815 x 1250	1470 x 815 x 1250
Chamber dimensions (LxWxH)(mm)	750 x 600 x 180	750 x 600 x 180
Sealing dimensions (LxW)(mm)	600 x 10 x 0.2	600 x 10 x 0.2
Seal to seal distance(mm)	430mm	430mm
Voltage/frequency	415V/50Hz/3P	415V/50Hz/3P
Power	3KW	3KW
Pump capacity	40m^3/h or 667 LPM	45m^3/h or 750 LPM

6. INSTALLATION

- Open the back door & fill vacuum oil.
- Give three phase power & check phase sequence indicator.
- Switch on the MCB & then press power button on the front panel.
- Set parameters (vacuum level, flushing level, sealing time & cooling time) as per product & pouch.
- Shutdown process: switch off the MCB.

7. FILLING VACUUM PUMP WITH OIL

There is no vacuum pump oil in the newly delivered machine. If the vacuum pump works without oil it will damage the pump, even in a short time. Please make sure that the vacuum pump has been filled with the oil up to the mark before the start-up.

a. Open the back cover.

b. Fill the vacuum pump with Sevol V/equivalent vacuum pump oil.

c. Make sure the oil level is between 1/2 and 3/4 of the oil level indicator.

d. Wait for 3 minutes.

e. Check the oil level is between 1/2 and 3/4 of the oil level indicator. If it is less than 1/2, please add more.

f. If the oil level is between 1/2 and 3/4 of the oil level indicator then close the cap and fix the back door.

8. LIST OF PARTS

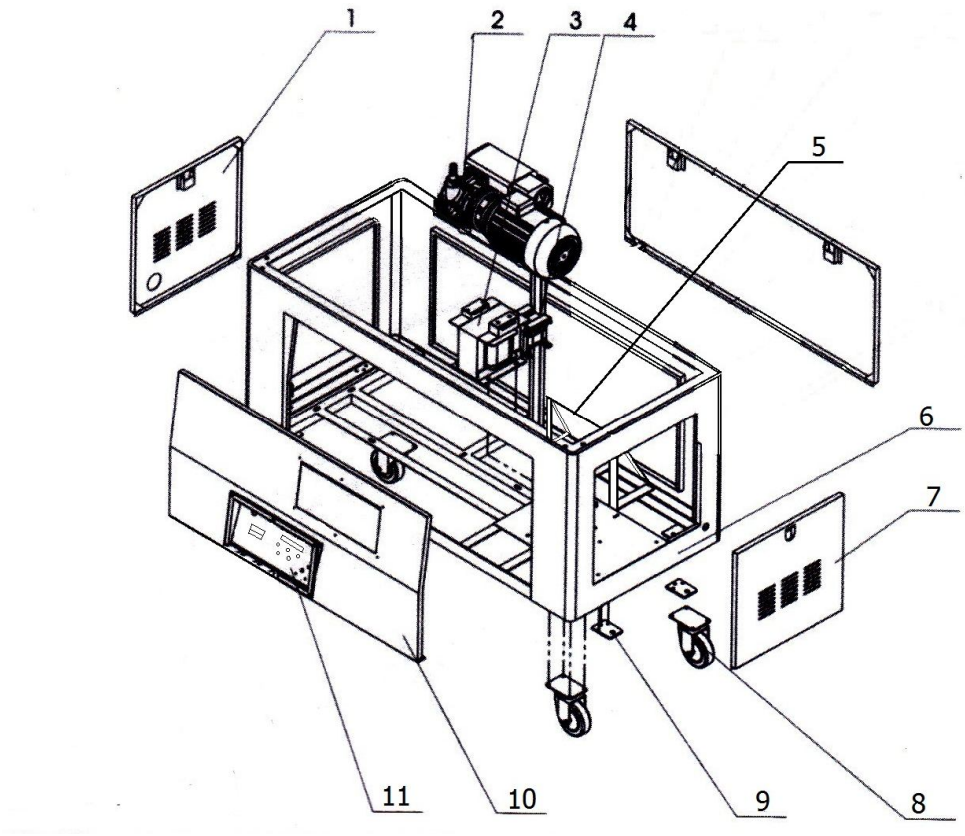

No	Item	Item code
1	Chassis door LH	1060020
2	Vacuum pump	1047016
3	Power transformer	1060061
4	Control transformer	1043025
5	Relay plate	1014150
6	Chassis	1060022
7	Chassis door RH	1060024
8	Caster wheel	1060025
9	Plate of chassis end	1060026
10	Front panel	1060023
11	Panel board	1032011

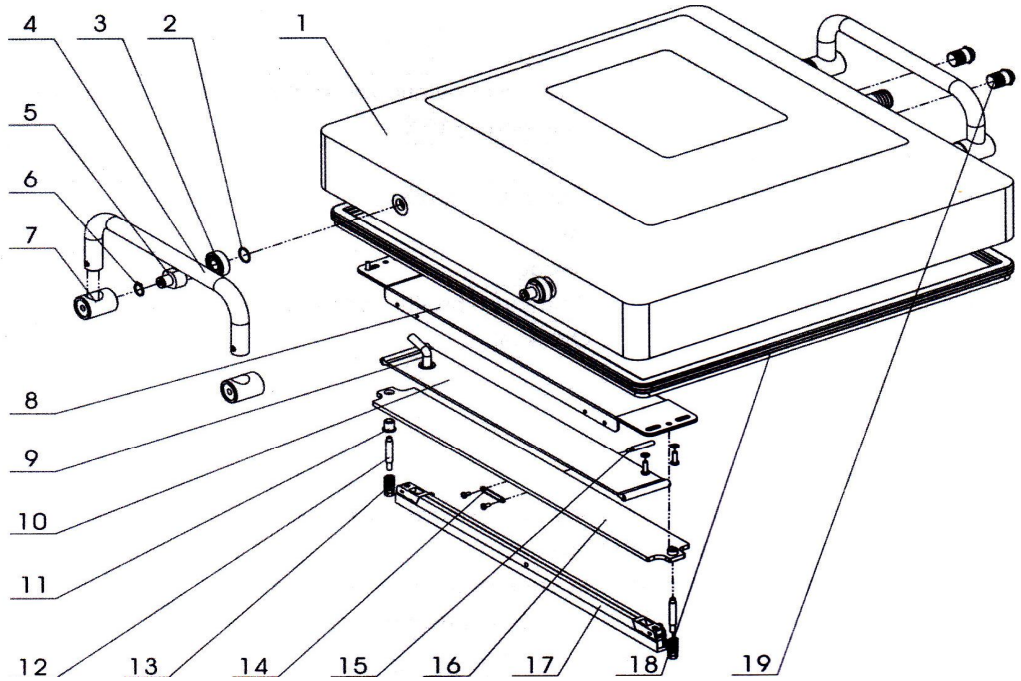

No	Item	Item code
1	Vacuum lid	1060001
2	O-ring	1060083
3	Bearing	1060084
4	Lid handle	1060085
5	Handle cum swing arm mounting plate	1060086
6	Washers	1060087
7	Lid handle bracket	1060088
8	Bed plate actuator	1060089
9	Connector of through –tube	1060090
10	Airbag	1060092
11	O ring	1060093
12	Heating plate holder	1060094
13	Actuator return spring	1060095
14	Guide pole	1060096
15	Return spring	1060097
16	Heating plate seat assembly	1060098
17	Heating plate assembly	1060099
18	Lid gasket	1060100
19	Airtight spring	1060101

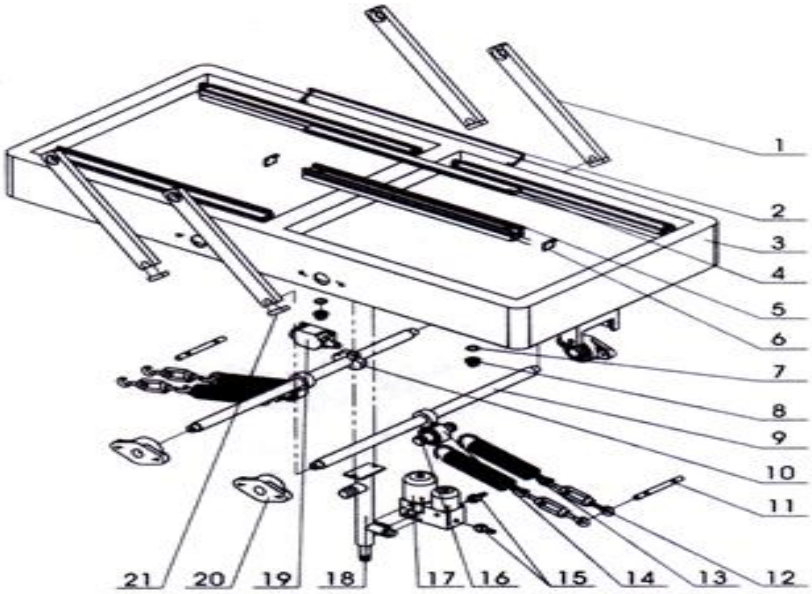

No	Item	Item code
1	Swing arm	1060019
2	Wringle guard	1060110
3	Vacuum bed	1060111
4	Silicon strip	1060127
5	Pad holder	1060112
6	Wringle guard mounting bracket	1060113
7	Sealing ring	1060114
8	Stopper plug	1060115
9	Swing arm shaft	1060116
10	Limit switch operating cam	1060117
11	Main spring mounting pin	1060118
12	Tension buckle hook	1060119
13	Main spring	1060128
14	Main spring holding pin	1060120
15	Solenoid connector	1060121
16	Main shaft crank	1060122
17	Solenoid valve assembly	1060123
18	Solenoid valve mounting bracket	1060124
19	Limit switch	1060129
20	Bearing seat	1060125
21	Shaft key	1060126

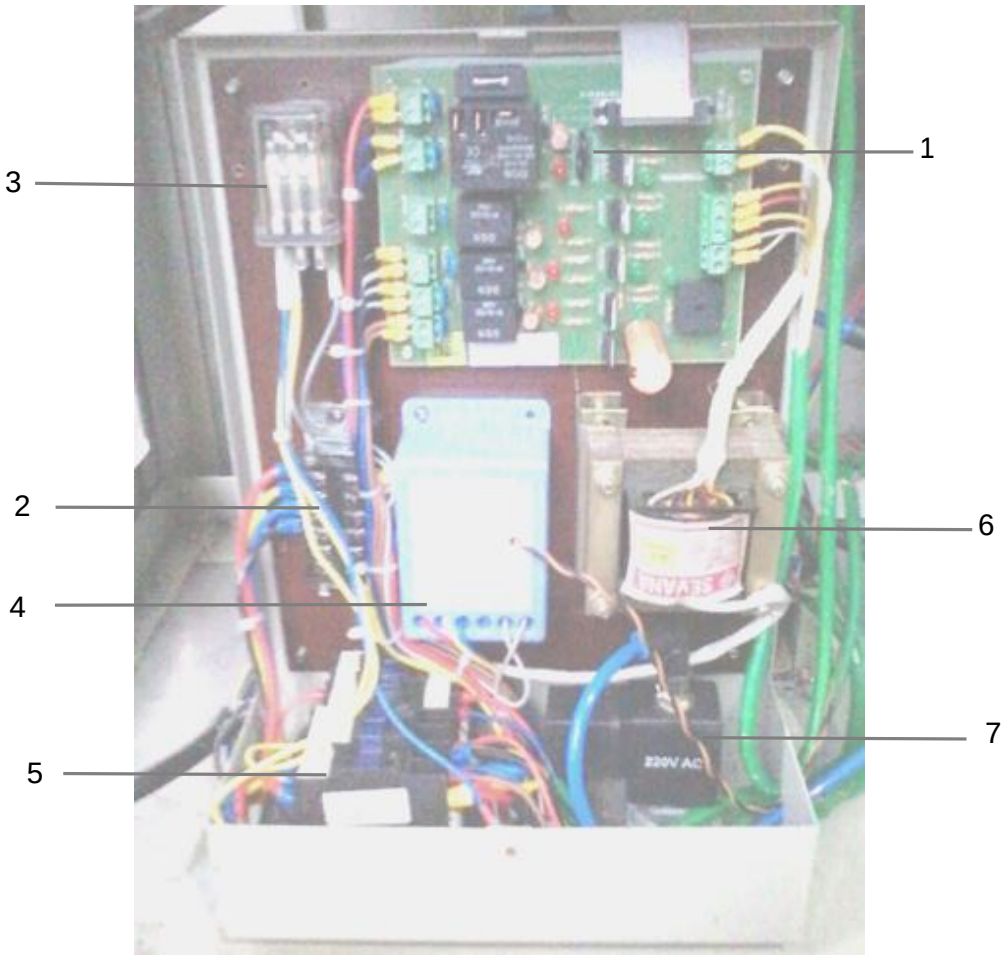

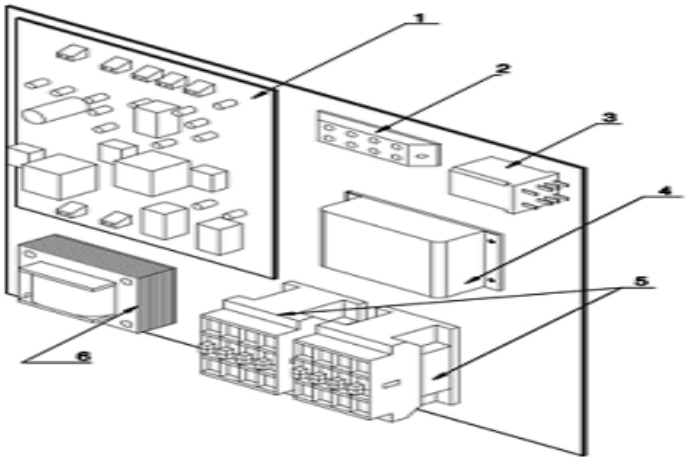

No	Item	Item code
1	Relay board	1033022/1033079
2	Terminal block 30a 3 way	1022041
3	CC2 relay	1023155
4	Phase sequence relay	1023001
5	Contactor(9A)	1020008
6	Power transformer 17V	1043025
7	Solenoid valve - Janatics NO	

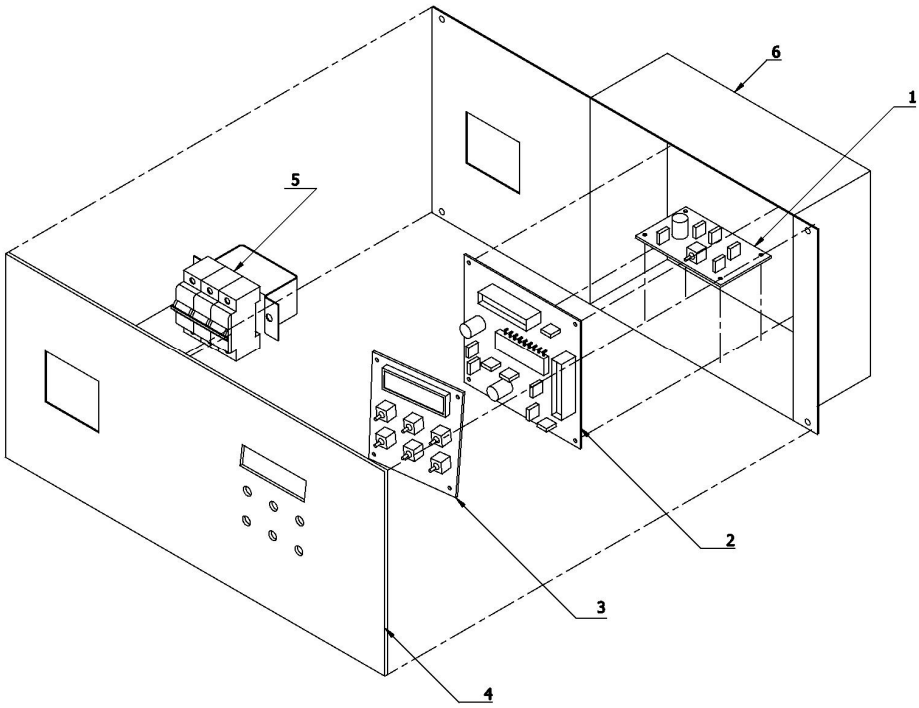

Sl no	Item	Item code
1	Transducer board	1052081
2	Micro controller board	1033007/1033009
3	Display board	1033034
4	Panel board	1032011
5	Mcb 32A	1022026
6	Microcontroller box	1014509

9. CONTROL PANEL

- LCD display
- Control buttons
- Power LED
- Phase indicator
- MCB 3 pole

10. PROGRAM MODES

Sevana's micro-processor based vacuum machine has 4 preset modes or programs. Each program can be set with different parameters. Variable parameters in each mode are

PARAMETER	RANGE
Vacuum level	0-760mm Hg(Vacuum level in the chamber)
Flush1(Gas1)	0-760mm Hg
Flush(Gas2)	0-760mm Hg
Flush3(Gas3)	0-760mm Hg
Sealing time	0.0 - 6.0 Sec(Depending up on the pouch material)
Cooling time	1 - 9 sec

- Vacuum levels represents in millimeter mercury up to vacuum has to be achieved (-760mmHg absolute vacuum, 0 is normal atmospheric pressure).
- Flush 1 represents level up to which first gas is flushed. If vacuum level is 720and flush 1 is 500, chamber is vacuumized to level 720mmHg (95%vacuum) and first gas is flushed to the chamber till vacuum level reaches 500.
- Flush 2 represents level up to which second gas is flushed. If vacuum level is 720,flush 1 is 500 and flush 2 is 400(53% vacuum) chamber is vacuumized to level 720 and first gas is flushed to the chamber till vacuum level reaches 500,second gas is flushed to the chamber till vacuum level reaches 400.
- Flush 3 represents level up to which third gas is flushed. If vacuum level is 720,flush 1 is 500 and flush 2 is 400 and flush3 is 300(40% vacuum) chamber is vacuumized to level 720 ,first gas is flushed to the chamber till vacuum level reaches 500,second gas is flushed to the chamber till vacuum level reaches 400,and third gas is flushed till vacuum level reaches 300.

TO FLUSH SINGLE GAS:

Set the levels to desired value. Set Flush1 to the level to which gas has to be flushed.(Eg: If the required vacuum is 720mmHg,gas has to be flushed up to 300 mmHg, set vacuum to 720,flush 1 to 300,flush 2 to 300,flush 3 to 300,so no gas is flushed after flush 1.

USING ONLY VACUUM:

If only vacuum is required, select MODE 4 by pressing the "MODE" button.

MODE: 4

VACUUM: 760mmHg

TO PRESET PROGRAM MODES :

Select the mode by pressing "MODE" button. To set the parameters press "SET" button.

MODE: 1

VACUUM: 760mmHg

To change the vacuum press the “UP” or “DOWN” button continuously till the required value is displayed.

To select the next parameter and save the preset value press SET again.

MODE: 1 FLUSH1: 600mmHg	MODE: 1 FLUSH2: 570mmHg
MODE: 1 FLUSH3: 720mmHg	MODE: 1 SEALING: 3SEC
MODE: 1 COOLING: 8SEC	MODE: 4 VACUUM ERROR: OFF

If again presses SET, machine will go to READY MODE. Vacuum Error ON/OFF option is given with Mode4 for vacuuming the Frozen Products.

11. STARTING THE MACHINE

CONTROL BUTTONS:

- Power
- Stop/Reset
- Mode
- Set
- Up
- Down

A LCD check function is done first. Version of the software is displayed.

INITIALIZING……	SEVANA QS VAC 4.00

The machine has four (4) modes/program presets. Each mode preset parameters are

- VACUUM LEVEL
- FLUSHING(1,2,3)
- SEALING TIME
- COOLING TIME

These parameters can be modified by the operator if required. The machine will automatically go to the previously used mode after initializing.

MODE: 1
READY MODE

Now the lid is closed, then vacuum increases up to the preset level.

MODE: 1
VACUUM: 0000mmHg

When the vacuum is built up to the preset level the message will change to an indication given below.

MODE: 1 FLUSH1:600mmHg

When the preset level pressure value reached, sealing will be ON. After sealing cooling ON

MODE: 1 SEALING: - ON	MODE: 1 SEALING: - OFF

MODE: 1 COOLING: - ON

After that the lid open automatically and the display changes to “ready mode”

MODE: 1 READY MODE

TO RESTART THE MACHINE:

Press the “STOP” button for 1 second.

INITIALIZING……	SEVANA QS VAC 4.00

MODE: 1 READY MODE

12. OPERATION

- Switch on the supply
- Adjust the vacuum and other parameters
- Select the required mode
- Insert the product into the film pouch and then place it in the vacuum chamber in such a way that the open end of the pouch is in between sealing element and jaw.
- Close the lid.
- After the operation cycle, lift the lid and inspect the product.
- Machine is now ready for next operation.

13. MAINTENANCE

Caution: Isolate electric power supply before doing the maintenance.

- Blow off the dust and film debris using a blower or compressed air.
- Check the oil level regularly
- "Oil change/ Top Up" message will be displayed on the completion of every 5000 operation cycles. Change the Oil & fill as per instructions, then press SET and MODE buttons together to reset the Oil alarm.

14. ELECTRICAL SCHEMATIC

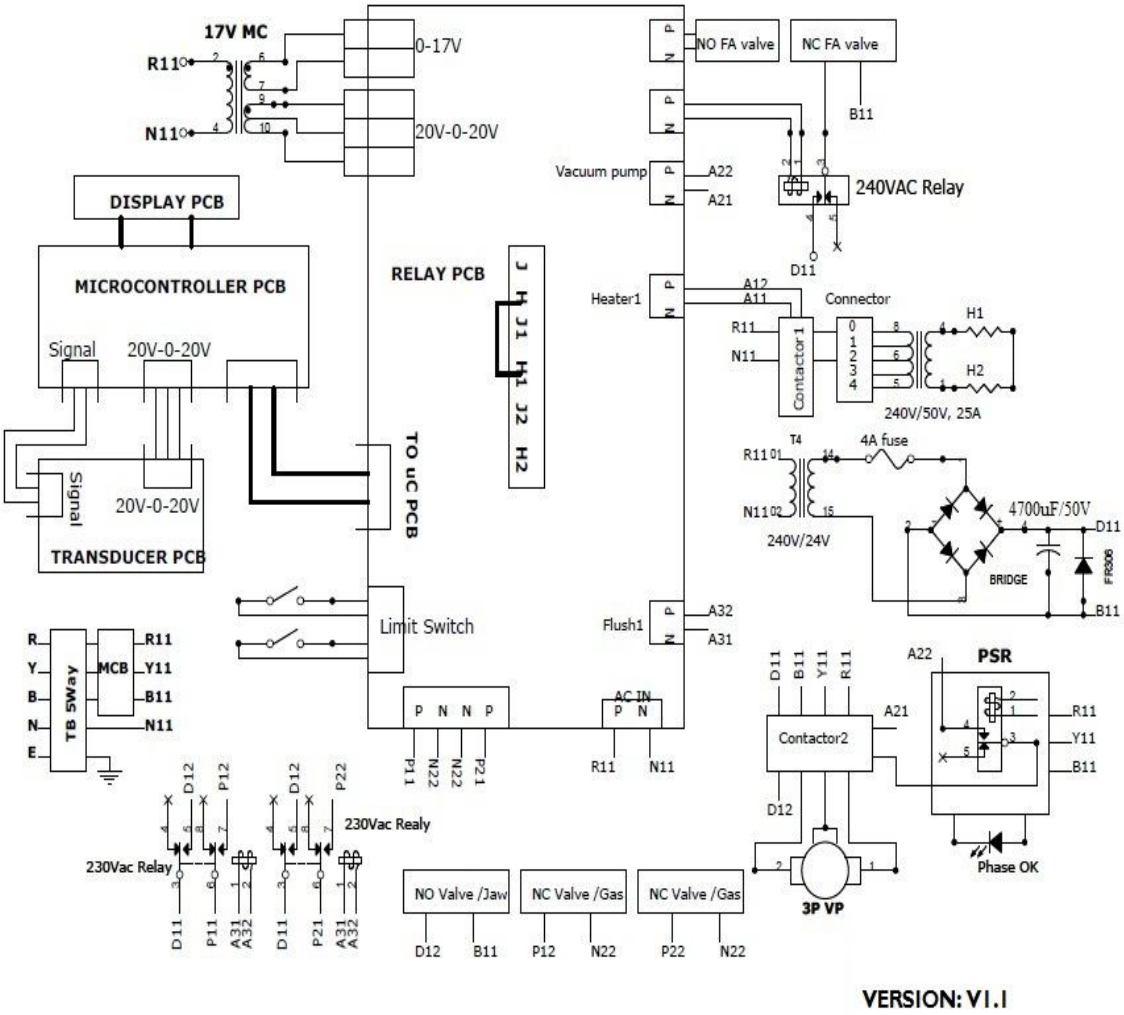

15. TROUBLESHOOTING

No.	Complaint	Reasons	Remedy
1	Machine does not work; power switch does not light up. Phase sequence LED does not light up (in three phase machine only)	1.No AC supply. 2.Fuse blown/MCB tripped. 3.Mains cord failure. 4.MCB failure. 5.Phases are not in sequence. 6.Power switch failure.	1.Restore AC supply. 2.Check for any short circuit or replace the fuse/reset the MCB. 3.Replace mains cord. 4.Replace the MCB. 5.Inter change any two phase lines. 6.Replace it.
2	Vacuum pump does not work when lid is closed and vacuum level is always displayed	1.Micro switch does not operate. 2.Defective micro switch. 3.Defective contactor (coil open or contact burned out). 4.Defective relay. 5.Defective motor. 6.Defective PSR.	1. Adjust switch operating lever screw suitably to operate the switch when lid is closed. 2.Replace the micro switch. 3.Replace the contactor. 4.Replace the relay board. 5.Replace or rectify the motor. 6.Replace the PSR.
3	The lid does not remain closed even after vacuum pump starts	1.Lid gasket does not touch the chamber face uniformly.	a.Press the lid. b.Check the height of swing arm. If the height is optimum, the gasket will touche the chamber uniformly.
4	Insufficient Vacuum Reading	1.Low vacuum setting 2.Solenoid valve leaks: atmospheric air enters in to the chamber through the solenoid valve due to, a)Defective solenoid valve. b)Defective relay. 3.Low oil level in the vacuum pump. 4.Moister contaminated oil. 5.Vacuum leaks through lid gasket/bolt holes on the lid/pipe joints/bushes at cable entry. 6.Wear and tear of vanes of vacuum pump. 7.Defective transducer Board or twisted cable to transducer board.	1.Increase the vacuum setting. 2. a)Replace the solenoid valve. b)Replace relay board. 3.Keep the required oil qty in the vacuum pump. 4.Drain the oil completely and refill. 5.Identify the location of leakage and replace the defective components or rectify the problem by tightening the joints. 6.Overhaul /replace the pump. 7.Replace the defective.
5	Sealing head operate but sealing does not takes place	1.Low sealing time setting. 2.heating element failure. 3.Defective sealing transformers.	1.Increase sealing time. 2.Replace heating element. 3.Replace defective sealing transformers.
6	Machine halts after sealing	1.Defective relay. 2.Defective air inlet solenoid valve.	1.Replace the relay board. 2.Replace solenoid valve.
7	Pouch expands during vacuum time	1.Low gap between sealing head and pad holder assembly.	1.Increase the gap by adjusting the pad holder assembly.

8	Nonuniform sealing	1.High gap between sealing head and pad holder assembly. 2.Sealing head and pad holder not align properly. 3.Burnt Teflon fabric.	1.Reduce the gap. 2.Align sealing head and pad holder. 3.Replace the Teflon fabric.
9	Machines works fine, but blank/garbage display	1.Defective display. 2.FRC cable of display or its connector defective. 3.EMI issue	1. Replace display board. 2.Replace cable and connector. 3.Give 103 disc capacitor between 1st & 2nd , 15th & 16th pins of LCD.
10	Setting is not possible. The Microcontroller does not responding to push button pressing.	1.Defective switches. 2.Defective FRC Cable of Display PCB	1.Replace display board. 2.Replace cable and connector.
11	System hangs during operation	1.Temporary bug in program due to noise. 2.Defective micro controller board.	1.Switch off and restart the machine. 2.Replace Microcontroller board.
12	Overheating of Heating element/Transformer	1.Short circuit with body of machine. 2.Defective Relay/IRF 540 of heater in Relay PCB	1.Make proper wire connections. 2.Replace Relay PCB.
13	Machine trips while pump starts working or abnormal sound of pump.	1.Winding short with body. 2.Defective centrifugal switch. 3.Defective love jaw coupling bush.	1.Rewind or replace the pump. 2.Replace the switch or pump. 3.Replace the bush or pump.
14	Lid doesn't open after completing the operation.	1.Defective relay in the relay board. 2.Solenoid coil burned out.	1.Replace it. 2.Replace the coil.
15	Display shows fresh air always	1.Misalignment of micro switch. 2.Defective micro switch.	1.Correct the position. 2.Replace the switch.
16	Fuse blown out when machine is switched on	1.Short circuit of any part with machine body.	1.Check and correct it.
17	24V Transformer Fuse blown out.	1. Solenoid coil burned out.	1.Replace it.

16. SERVICE LOG

Date	Complaint	Correction	Name of technician